Wind. Sill/ Edges

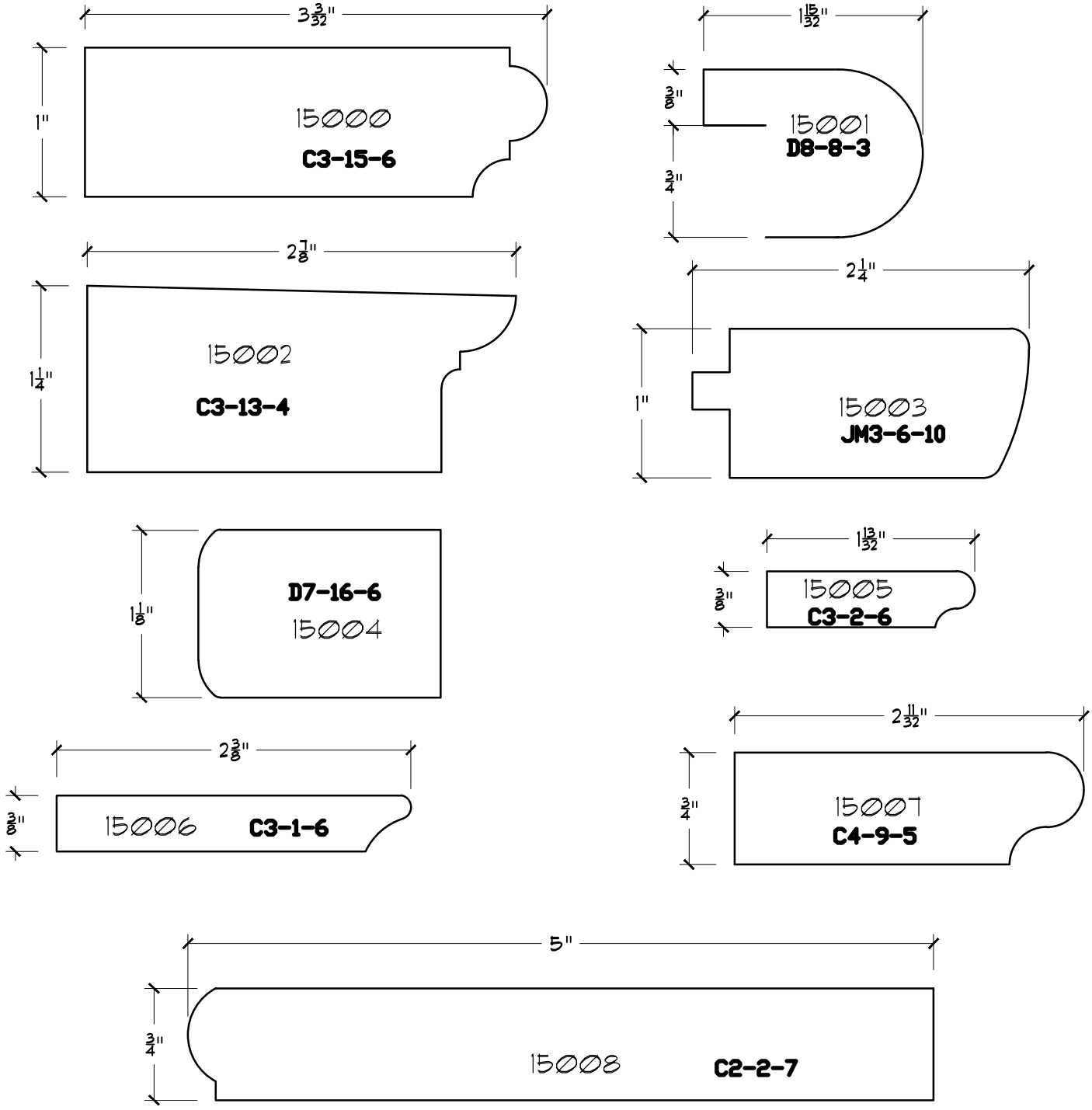

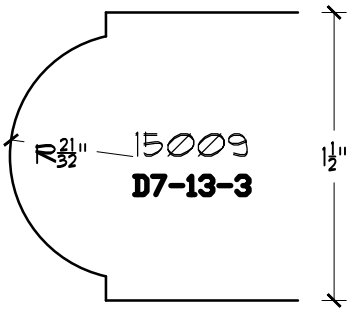

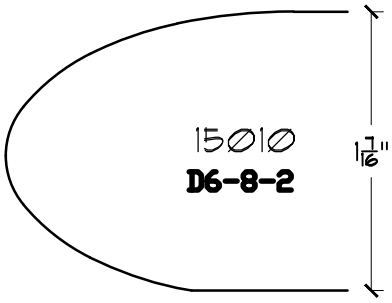

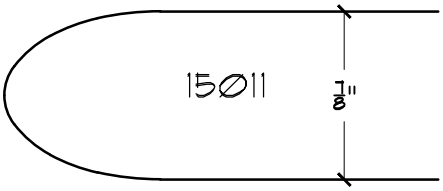

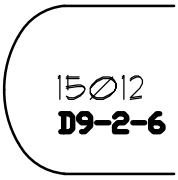

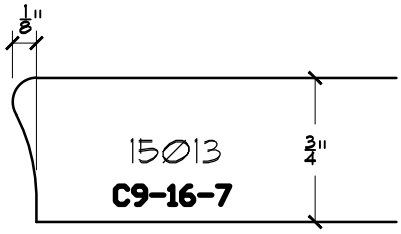

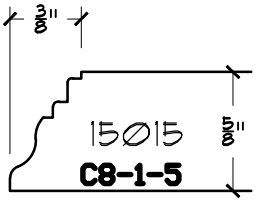

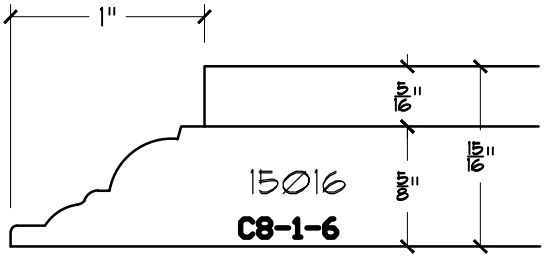

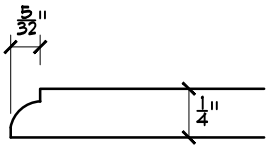

15017
C9-16-4

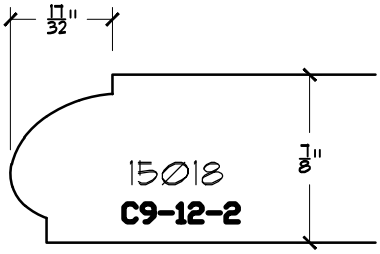

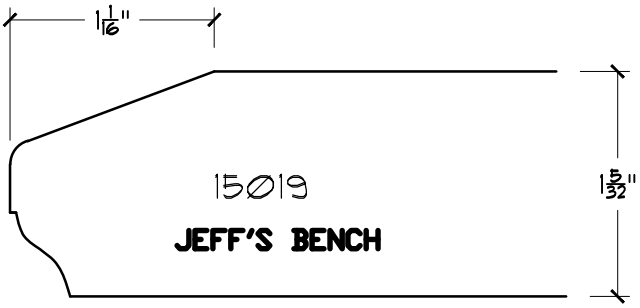

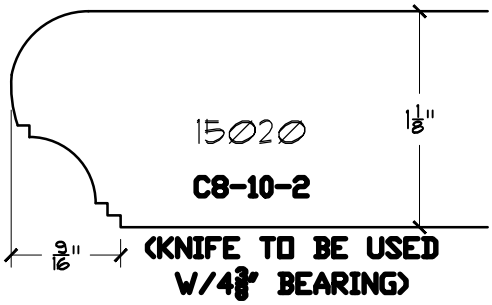

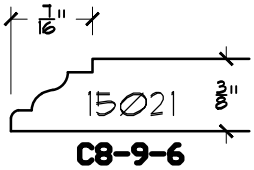

C8-9-6

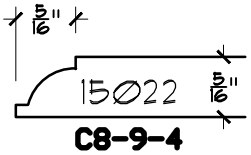

C8-9-4

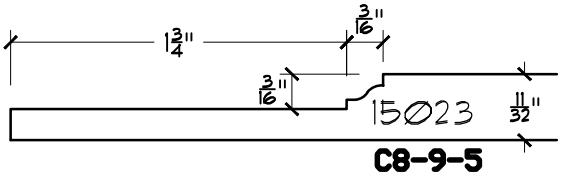

C8-9-5

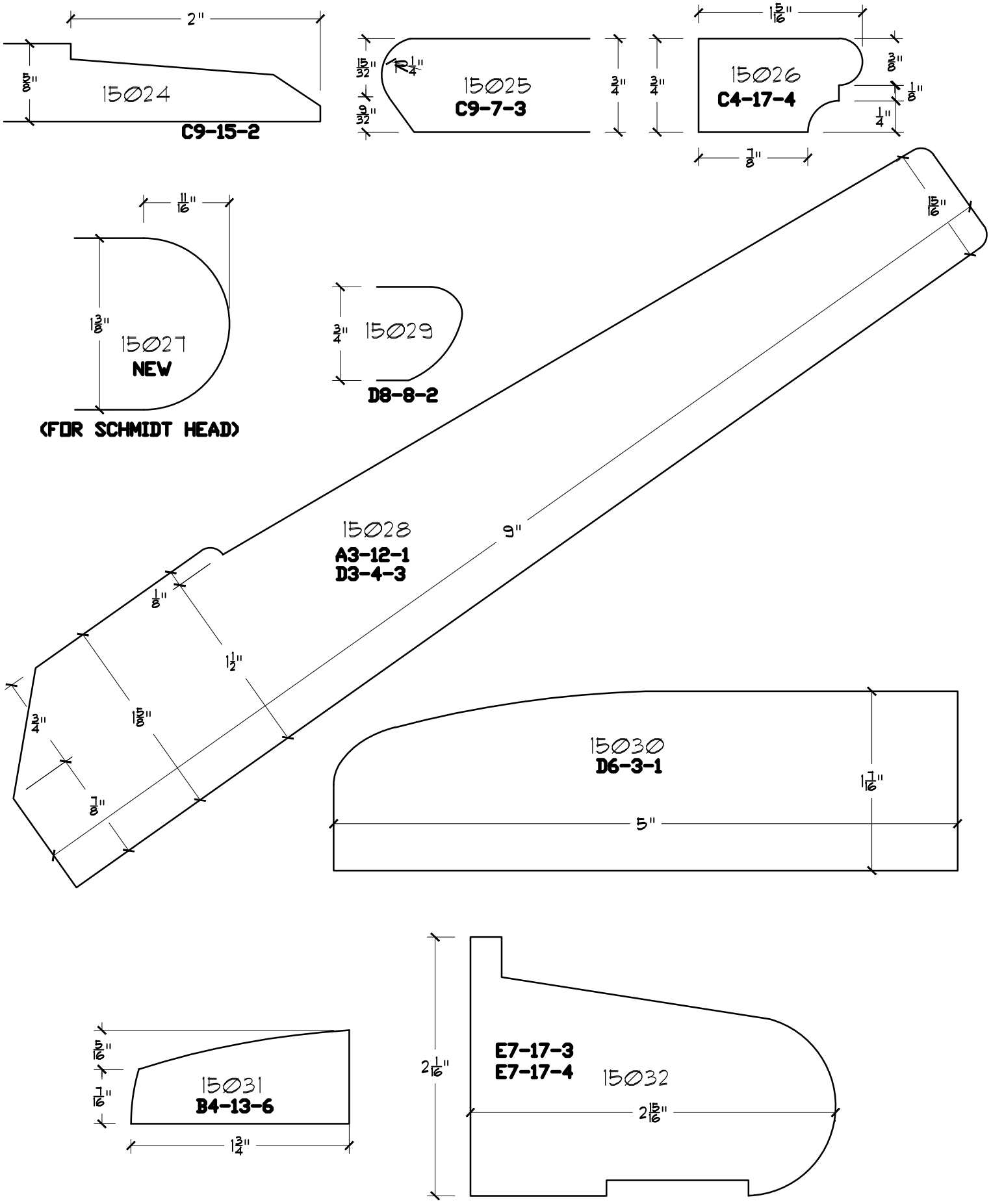
2"
5/8"
15024
C9-15-2
15/32"
R1/4"
9/32"
15025
C9-7-3
3/4"
3/4"
1 5/16"
15026
C4-17-4
3/8"
1/8"
1/4"
7/8"
11/16"
1 3/8"
15027
NEW
(FOR SCHMIDT HEAD)
3/4"
15029
D8-8-2
15/16"
15028
A3-12-1
D3-4-3
9"
1/8"
1 1/2"
3/4"
1 5/8"
7/8"
15030
D6-3-1
1 7/16"
5"
5/16"
7/16"
15031
B4-13-6
1 3/4"
2 1/16"
E7-17-3
E7-17-4
15032
2 15/16"

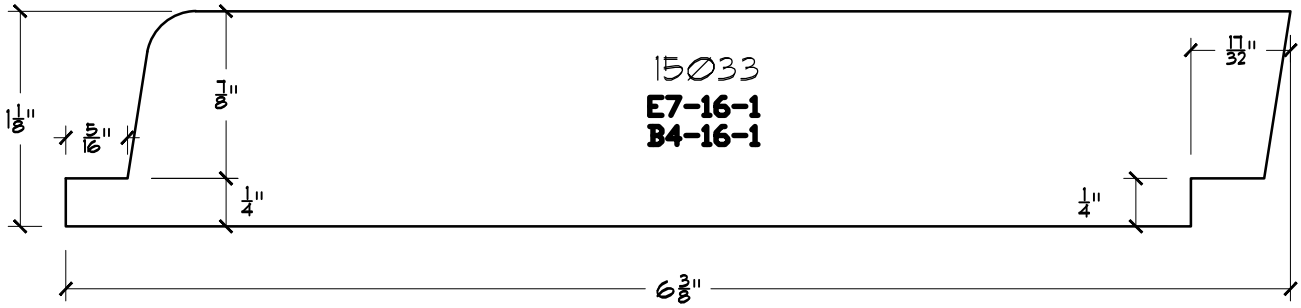
15033
E7-16-1
B4-16-1
1 1/8"
5/16"
7/8"
1/4"
17/32"
1/4"
6 3/8"

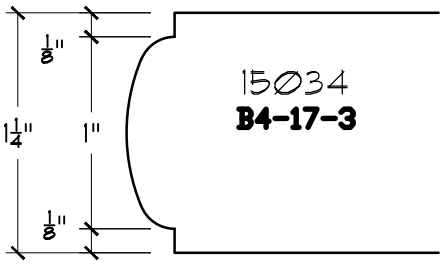
15034
B4-17-3
1/8"
1 1/4"
1"
1/8"

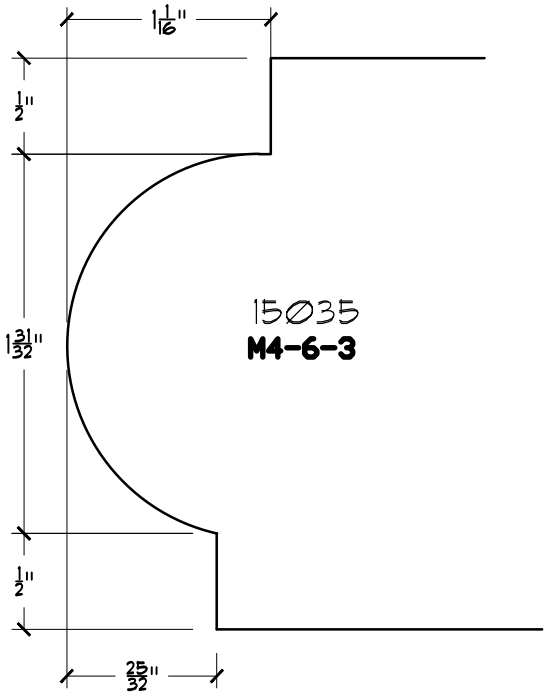
15035
M4-6-3
1 1/16"
1/2"
1 31/32"
1/2"
25/32"

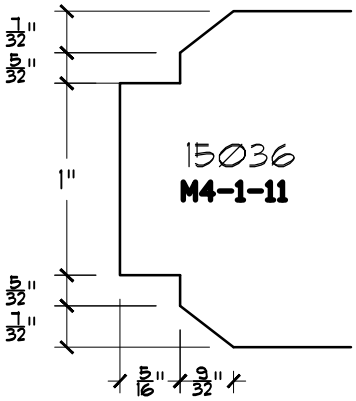
15036
M4-1-11
7/32"
5/32"
1"
5/32"
7/32"
5/16"
9/32"

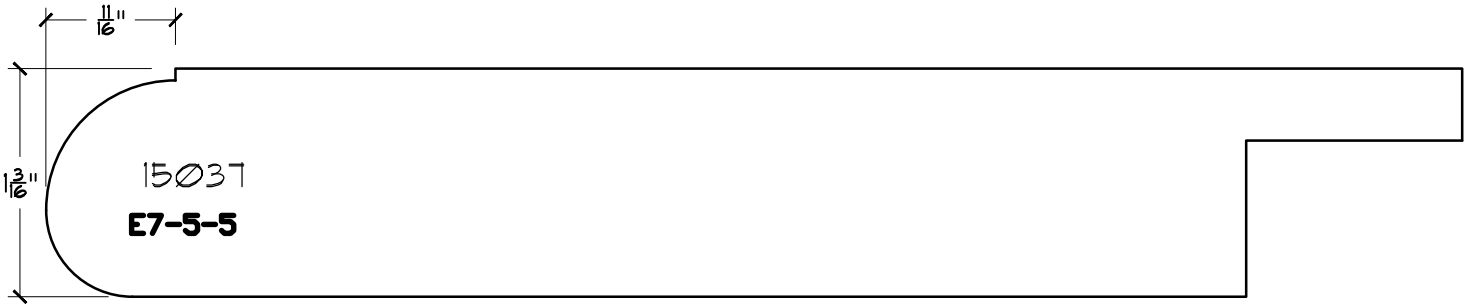
15037
E7-5-5
11/16"
1 3/16"

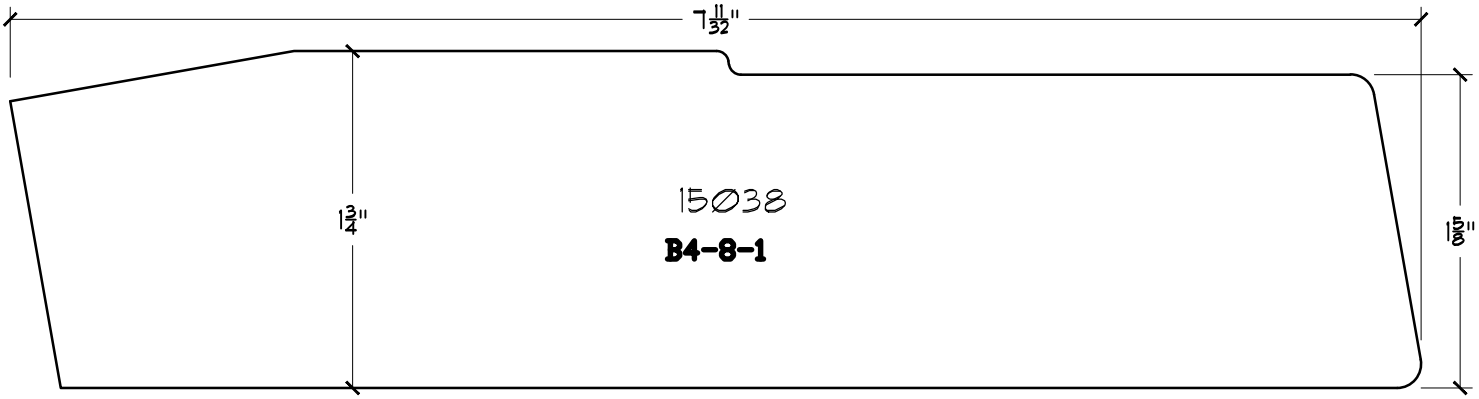
7 11/32"
1 3/4"
1 5/8"
15038
B4-8-1

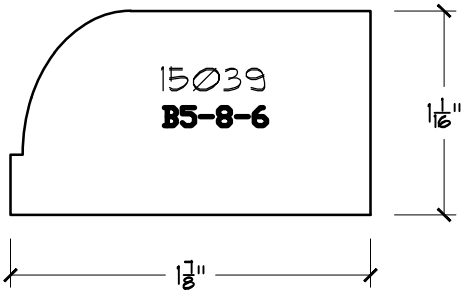
15039
B5-8-6
1 1/16"
1 7/8"

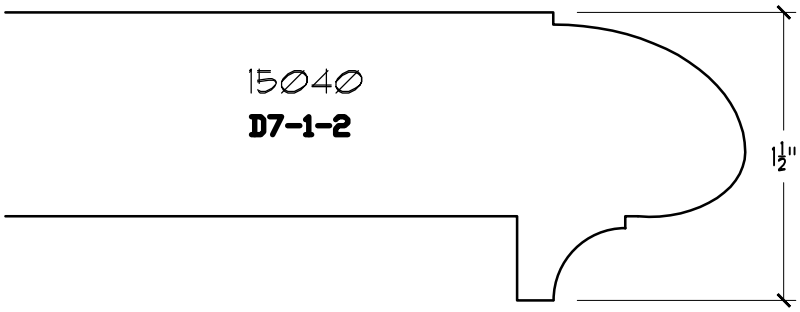
15040
D7-1-2
1 1/2"

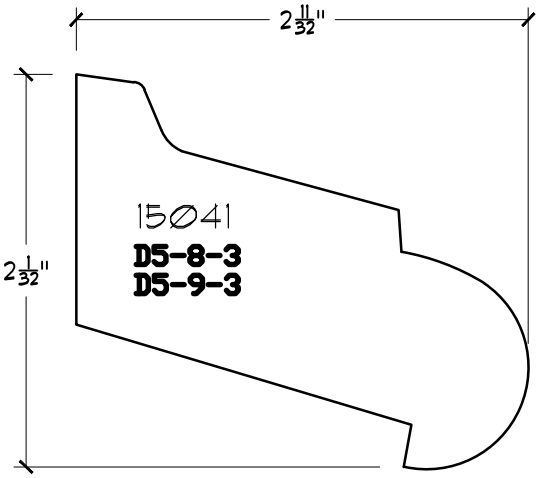
2 11/32"
2 1/32"
15041
D5-8-3
D5-9-3

15044
E4-7-6

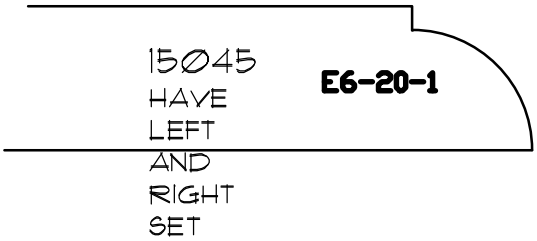
15045
HAVE
LEFT
AND
RIGHT
SET
E6-20-1

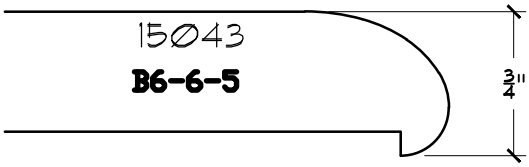
15043
B6-6-5
3/4"

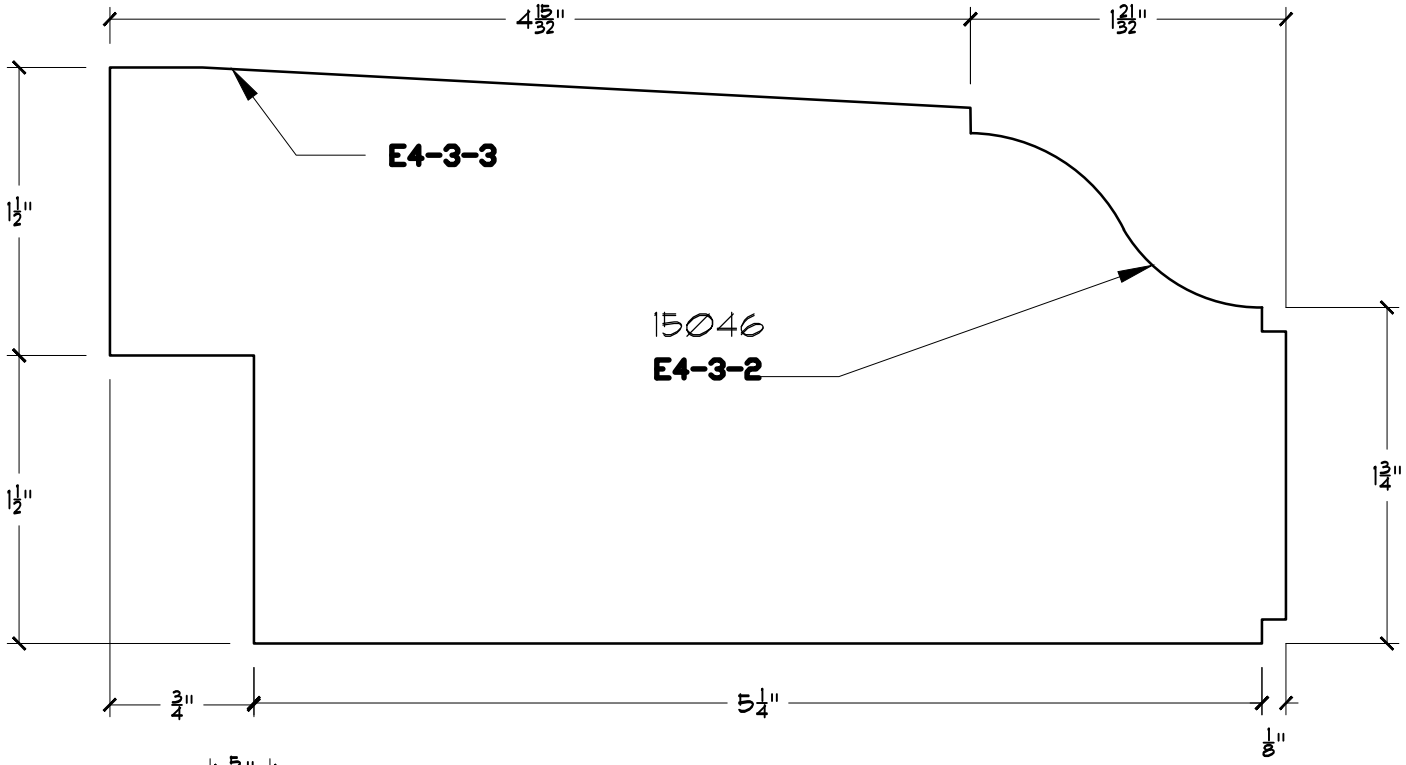
4 15/32"
1 21/32"
E4-3-3
1 1/2"
15046
E4-3-2
1 1/2"
1 3/4"
3/4"
5 1/4"
1/8"

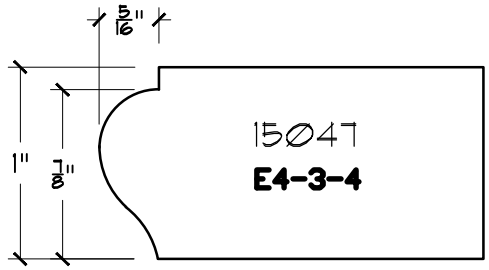
5/16"
1"
7/8"
15047
E4-3-4

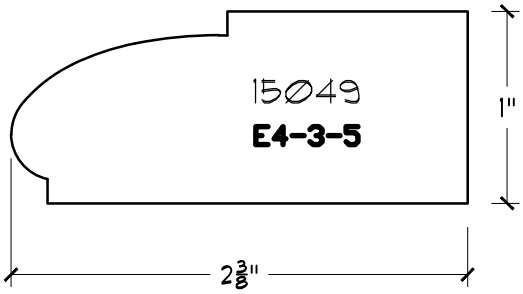
15049
E4-3-5
1"
2 3/8"

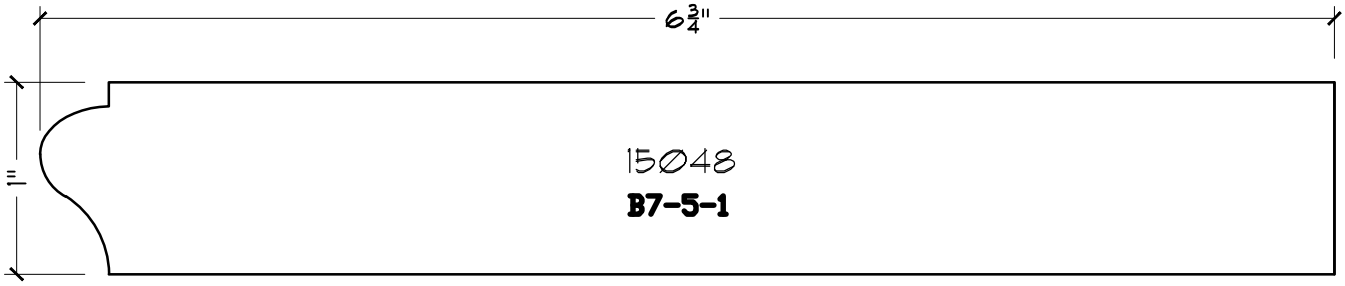
6 3/4"
1"
15048
B7-5-1

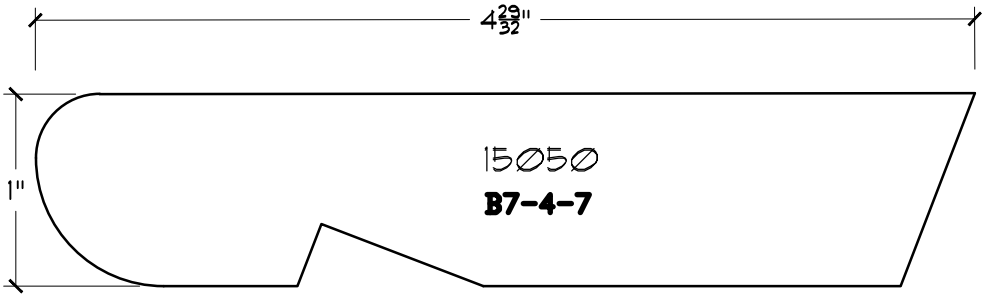
4 29/32"
1"
15050
B7-4-7

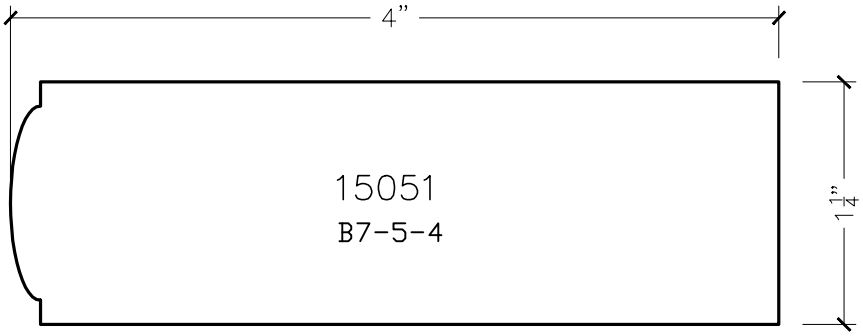

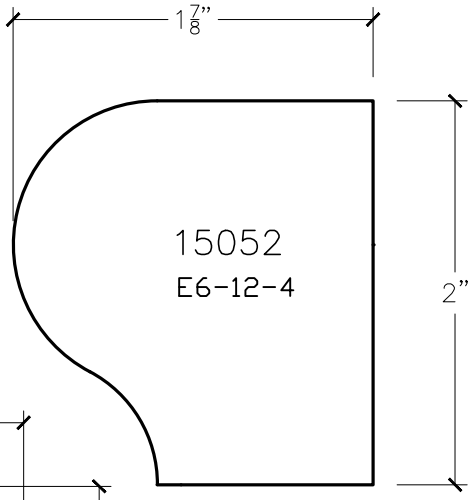

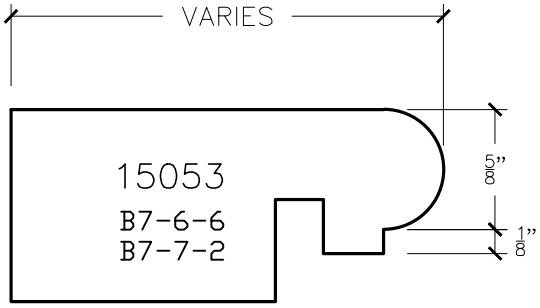

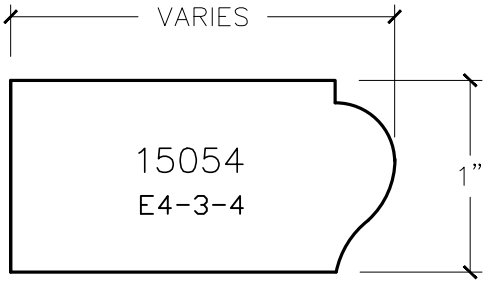

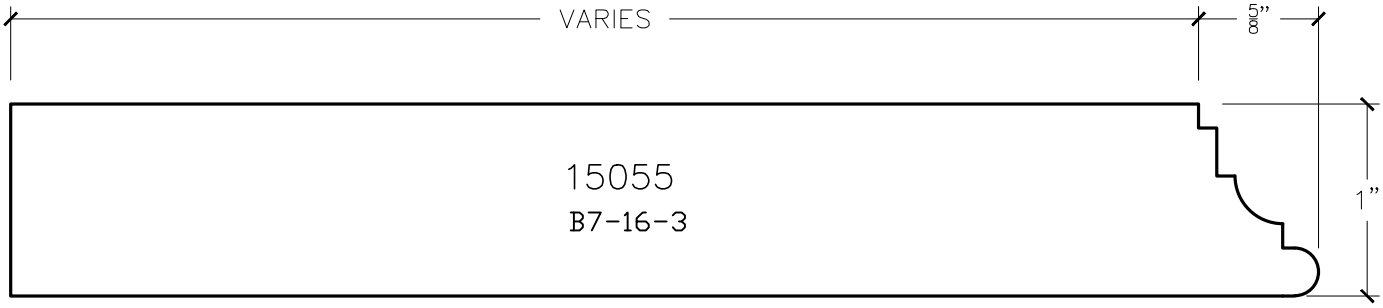

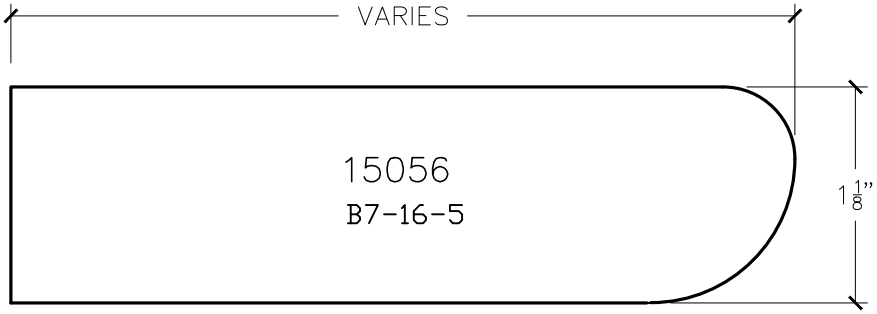

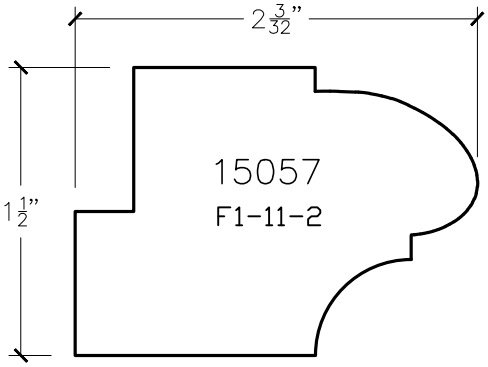

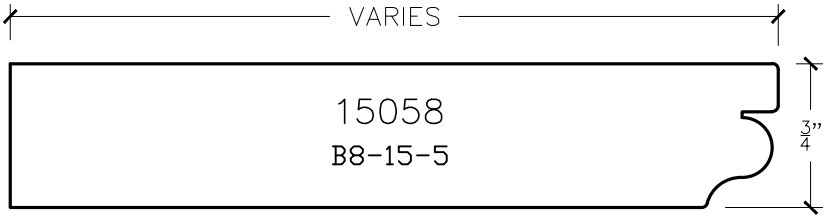

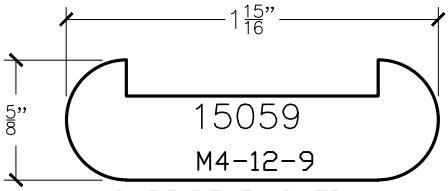

CARBIDE BACKED

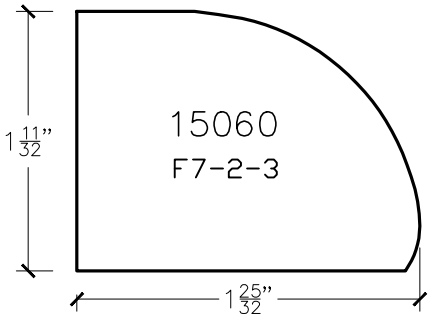
15060
F7-2-3
1 11/32"
1 25/32"

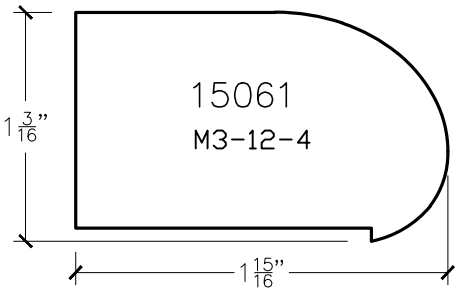
15061
M3-12-4
1 3/16"
1 15/16"