Handrail

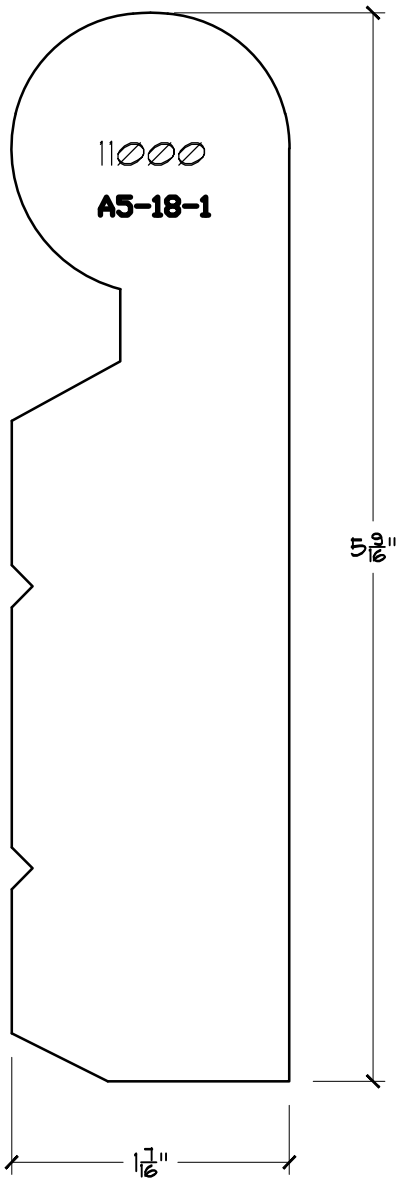

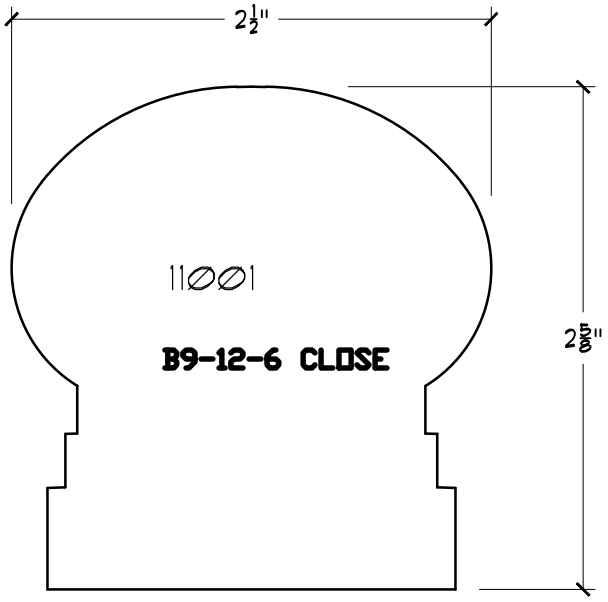

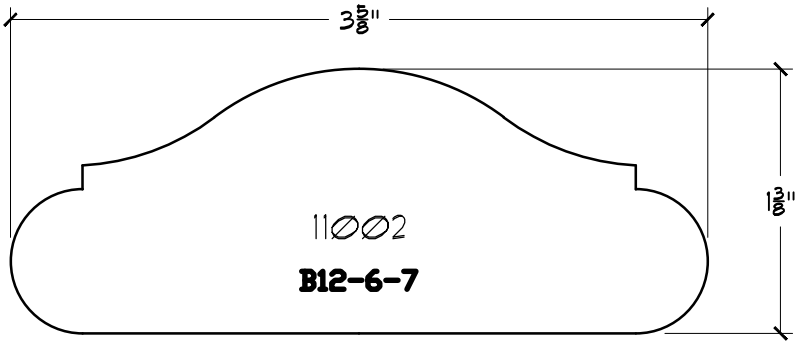
3 5/8"
1 3/8"
11002
B12-6-7

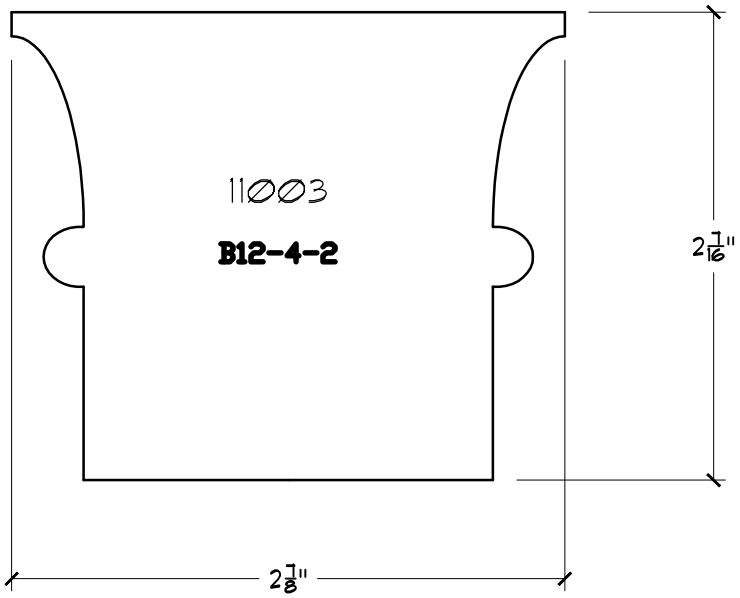
11003
B12-4-2
2 7/16"
2 7/8"

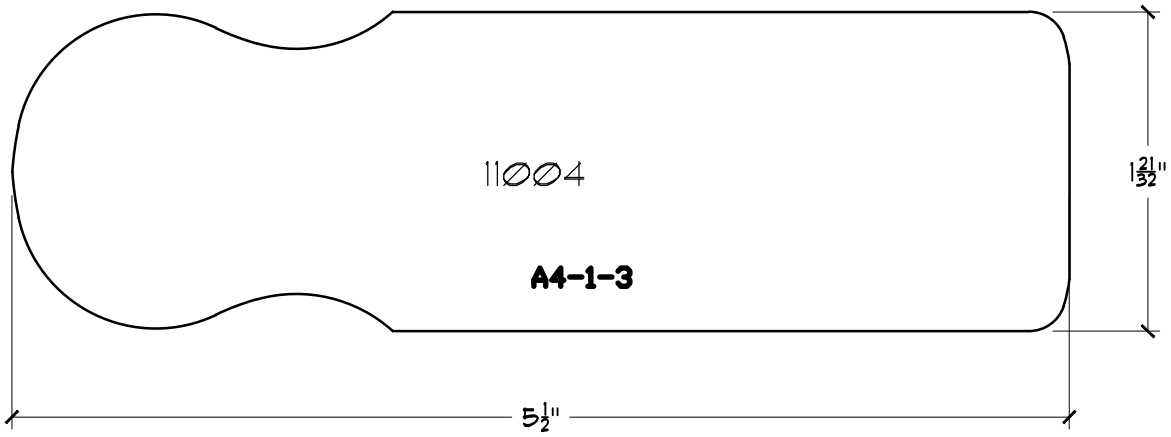
11004
A4-1-3
1 21/32"
5 1/2"

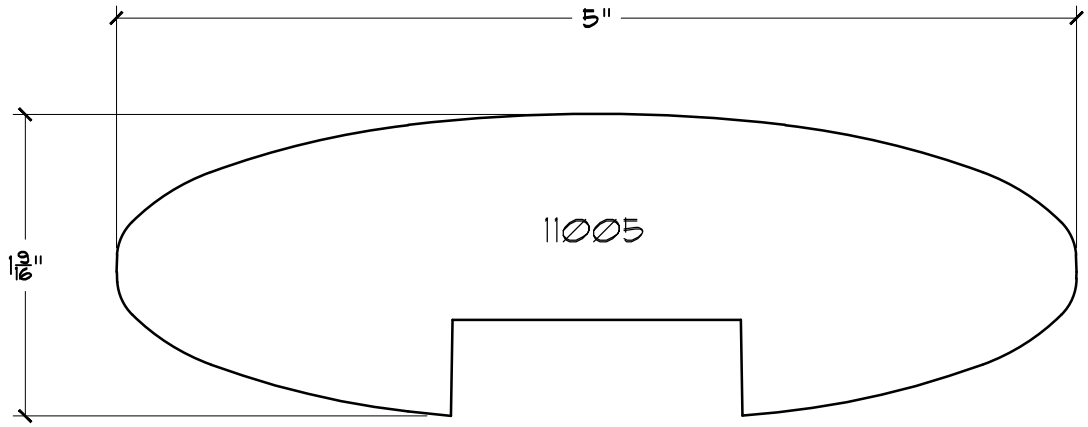
5"
11005
$1\frac{9}{16}$"

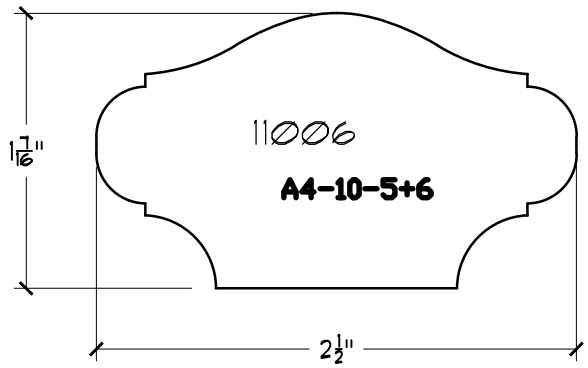
11006
A4-10-5+6
$1\frac{7}{16}$"
$2\frac{1}{2}$"

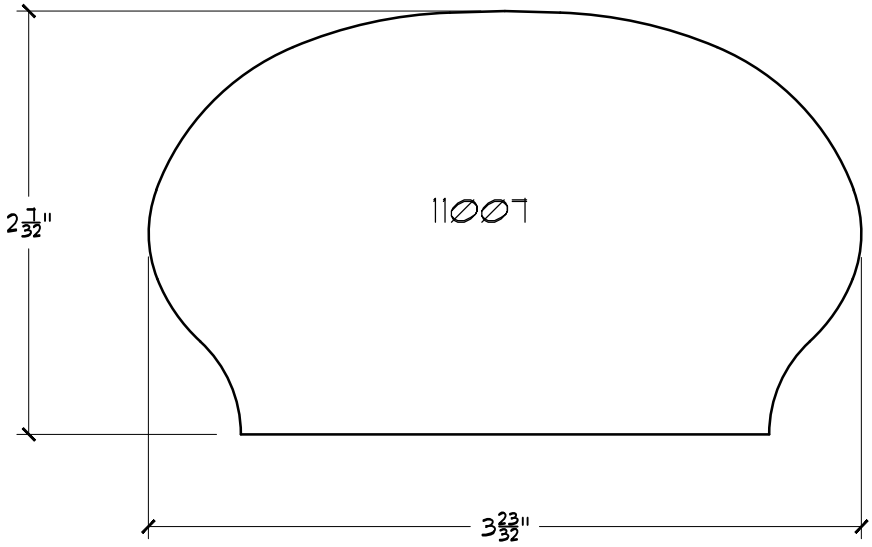
11007
$2\frac{7}{32}$"
$3\frac{23}{32}$"

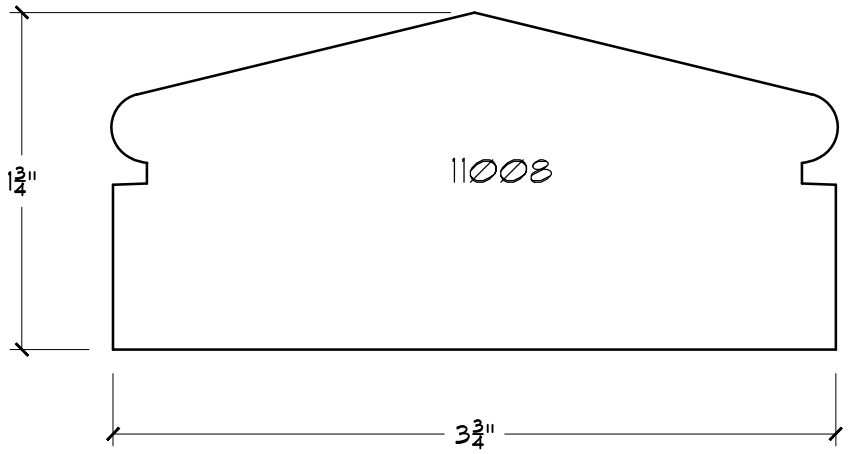
11008
1 3/4"
3 3/4"

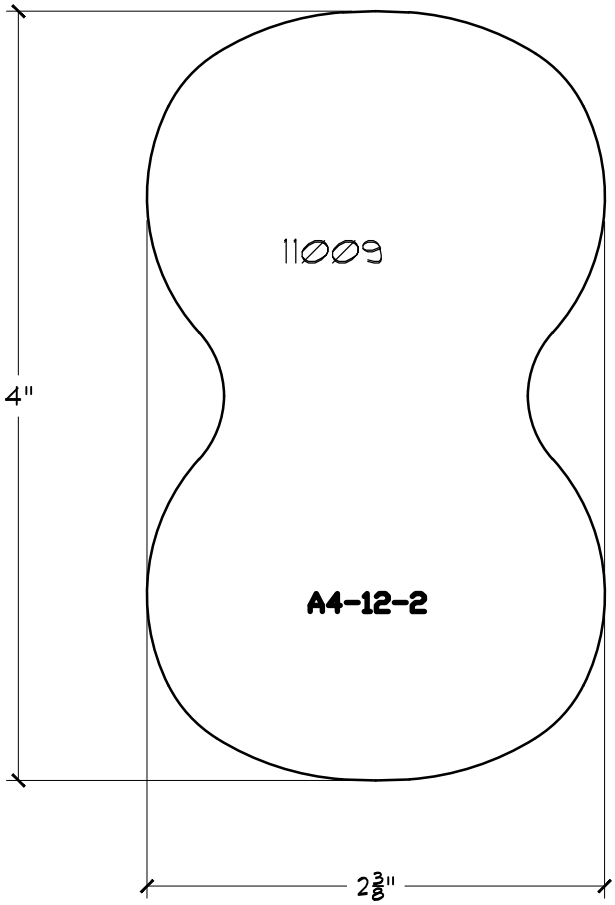
11009
A4-12-2
4"
2 3/8"

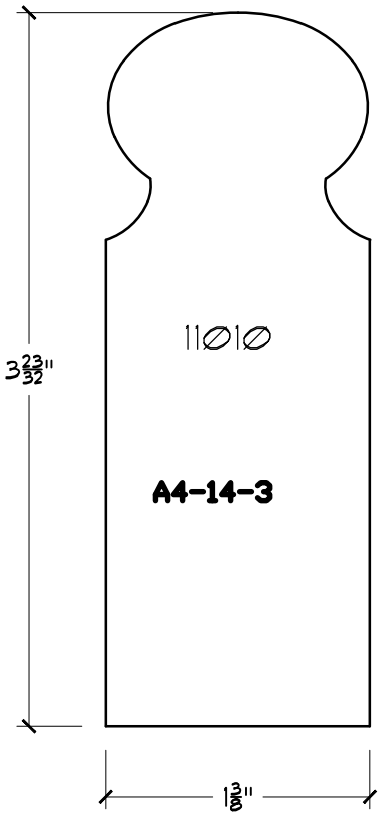
11010
A4-14-3
3 23/32"
1 3/8"

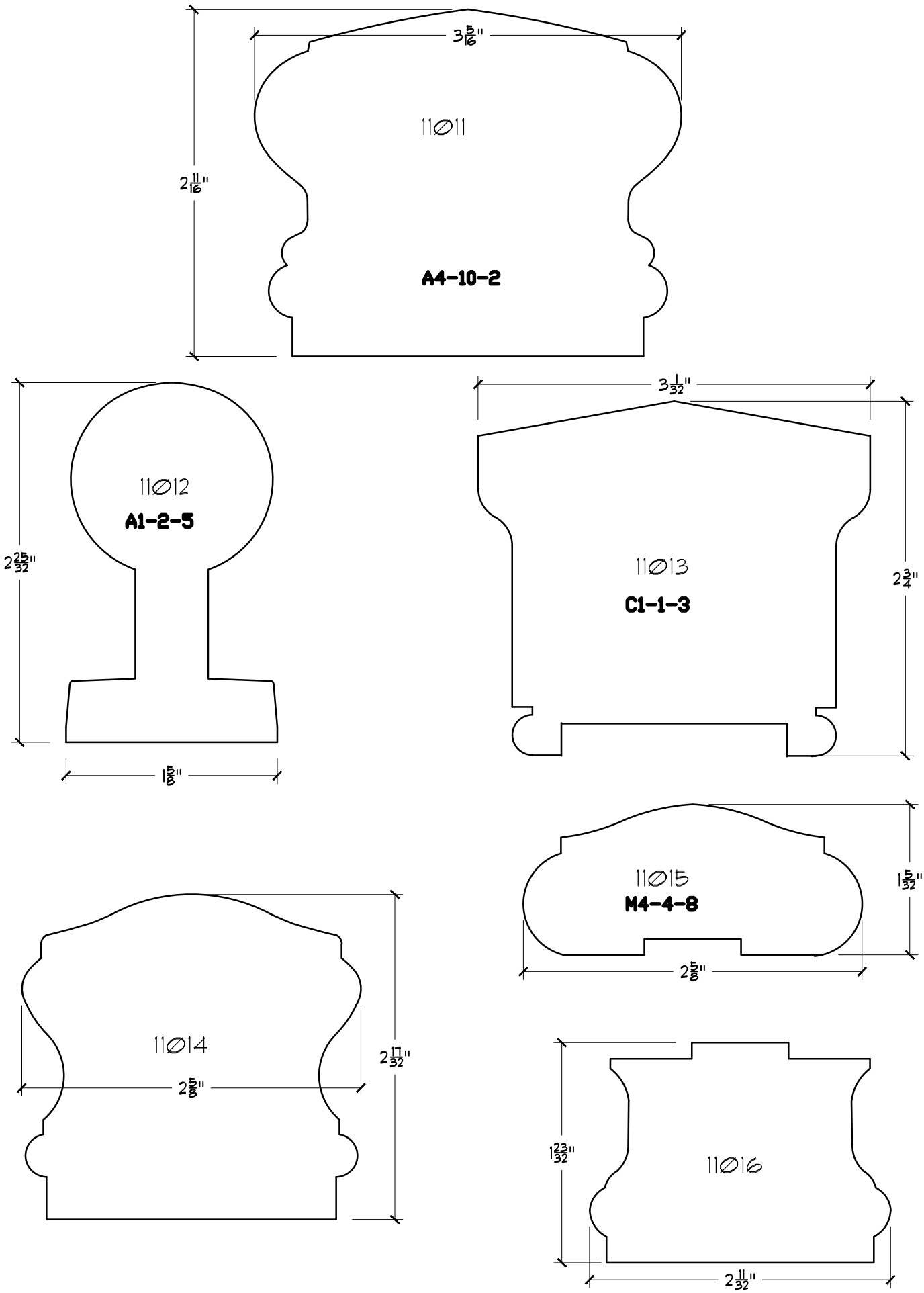
3 5/16"
11011
2 11/16"
A4-10-2
11012
A1-2-5
2 25/32"
1 5/8"
3 1/32"
11013
C1-1-3
2 3/4"
11015
M4-4-8
1 5/32"
2 5/8"
11014
2 5/8"
2 17/32"
1 23/32"
11016
2 11/32"

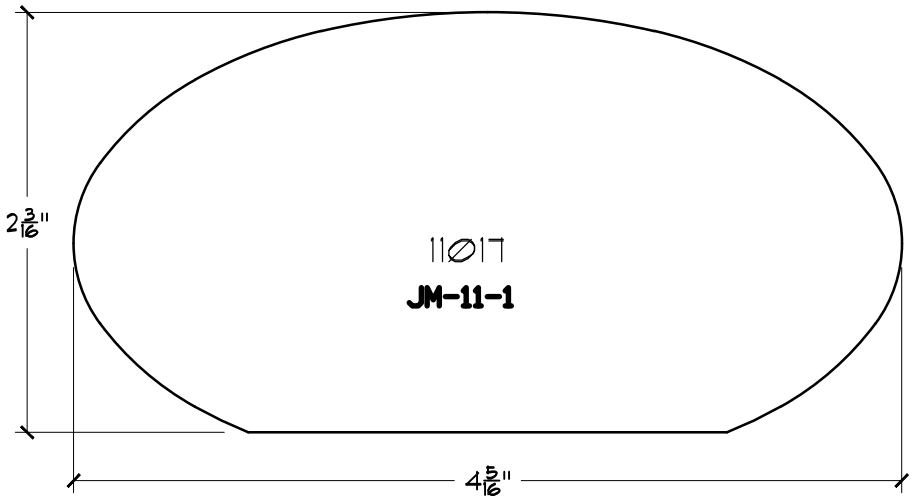
11017
JM-11-1
2 3/16"
4 5/16"

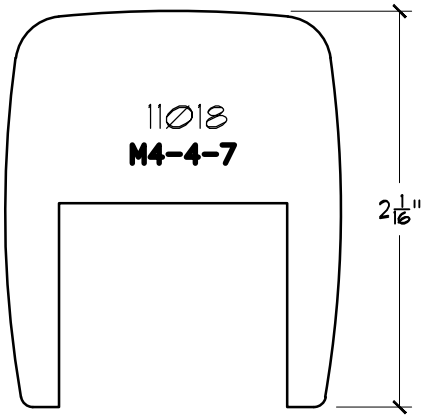
11018
M4-4-7
2 1/16"

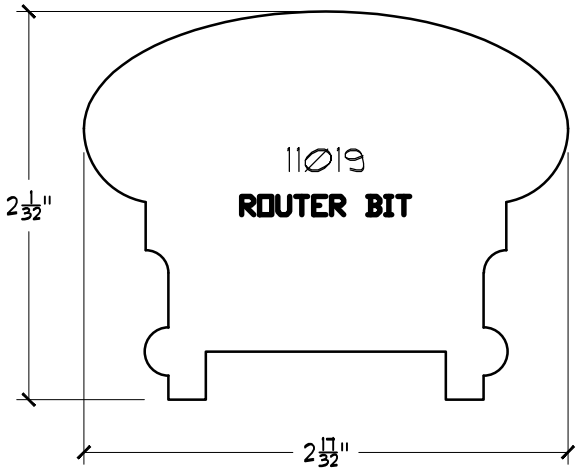
11019
ROUTER BIT
2 1/32"
2 17/32"

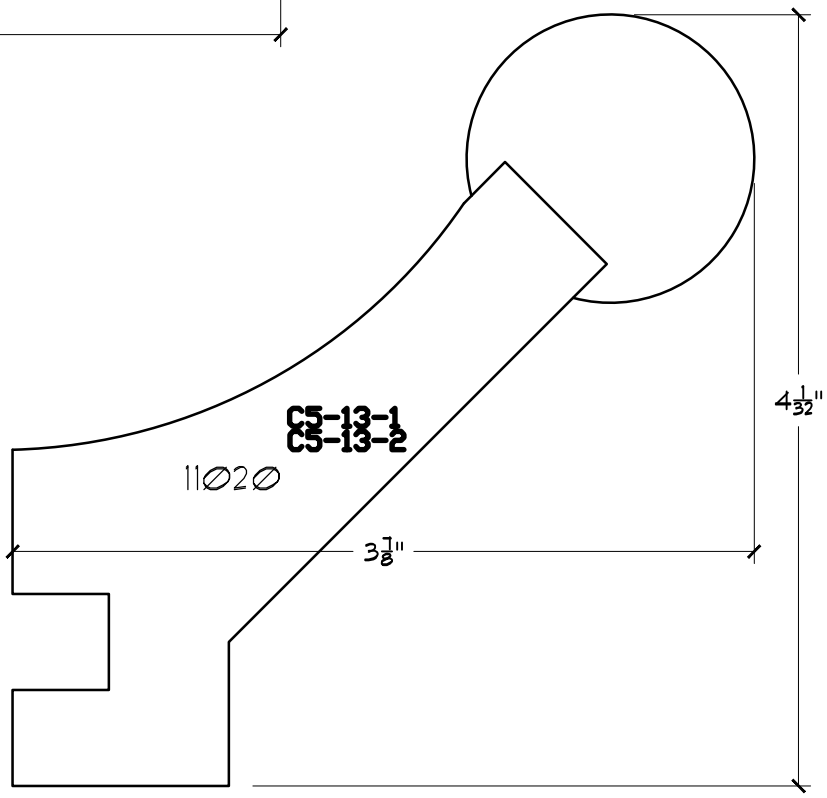
C5-13-1
C5-13-2
11020
4 1/32"
3 7/8"

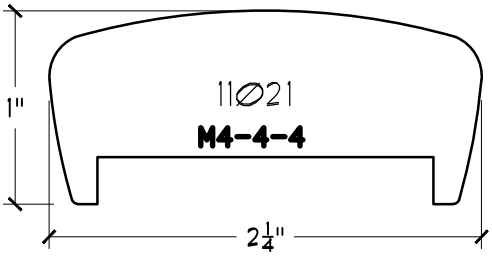
11021
M4-4-4
1"
2 1/4"

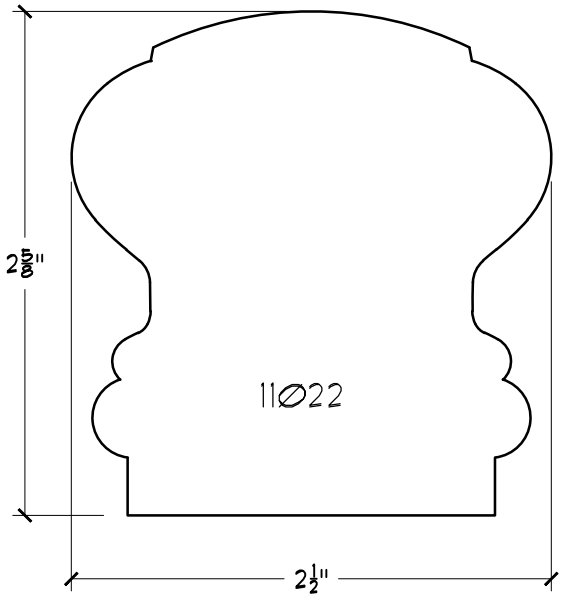
11022
2 5/8"
2 1/2"

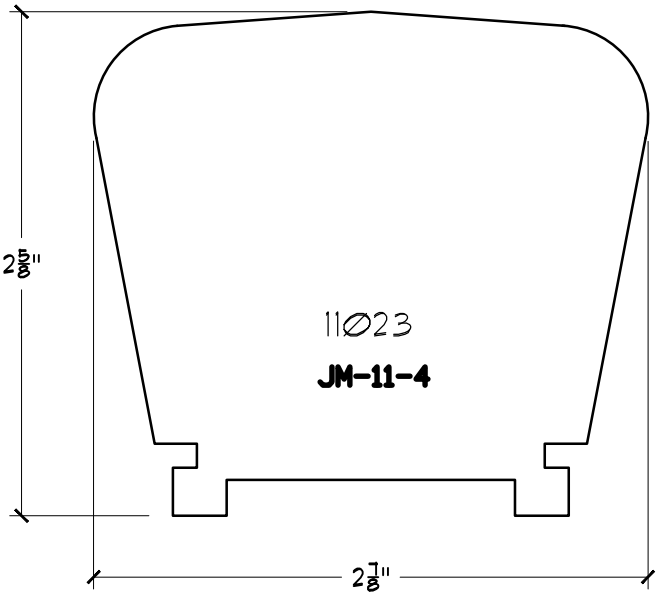
11023
JM-11-4
2 5/8"
2 7/8"

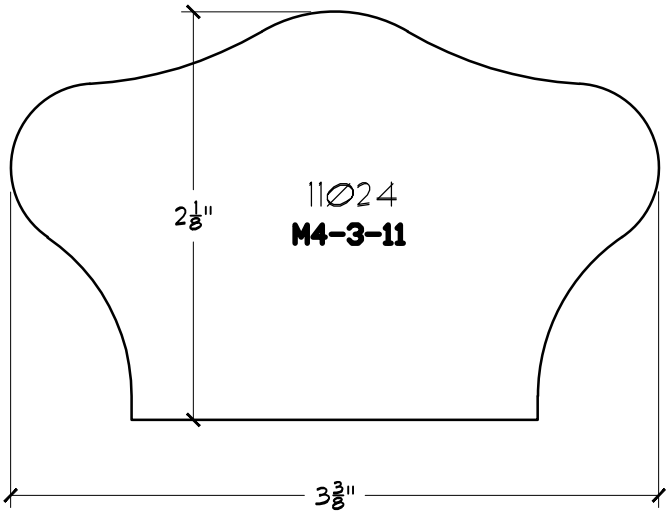
2 1/8"
11024
M4-3-11
3 3/8"

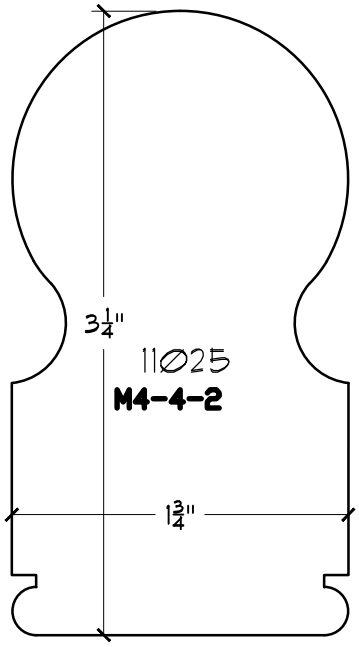
3 1/4"
11025
M4-4-2
1 3/4"

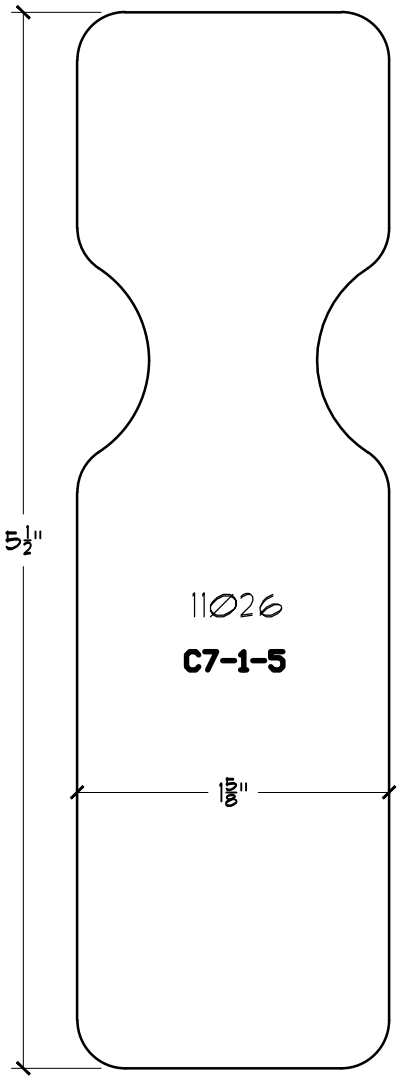
5 1/2"
11026
C7-1-5
1 5/8"

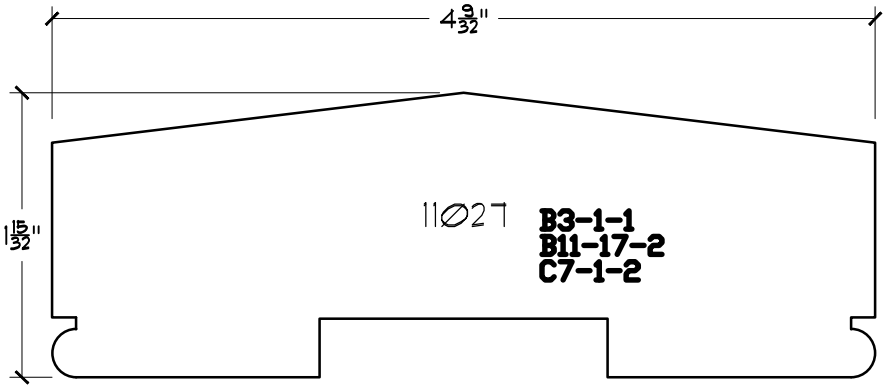
4 9/32"
1 15/32"
11027
B3-1-1
B11-17-2
C7-1-2

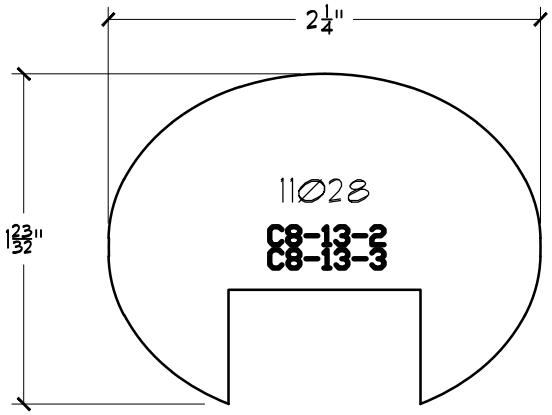
2 1/4"
1 23/32"
11028
C8-13-2
C8-13-3

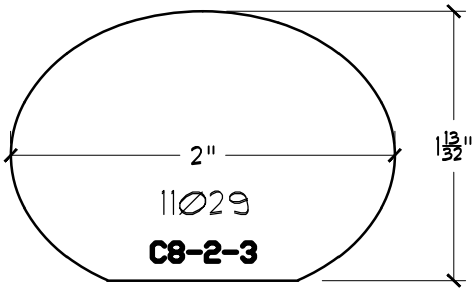
2"
1 13/32"
11029
C8-2-3

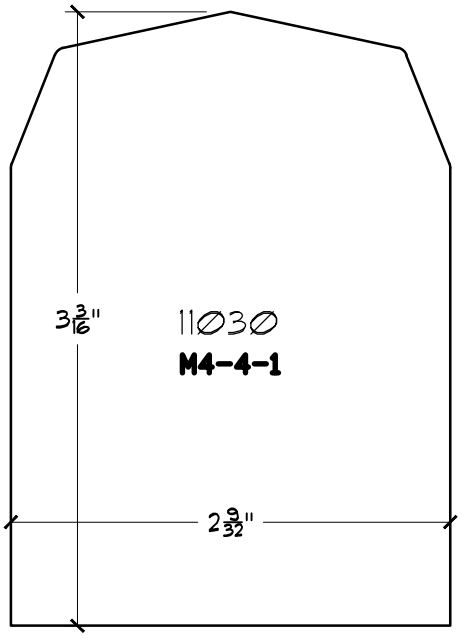
3 3/16"
11030
M4-4-1
2 9/32"

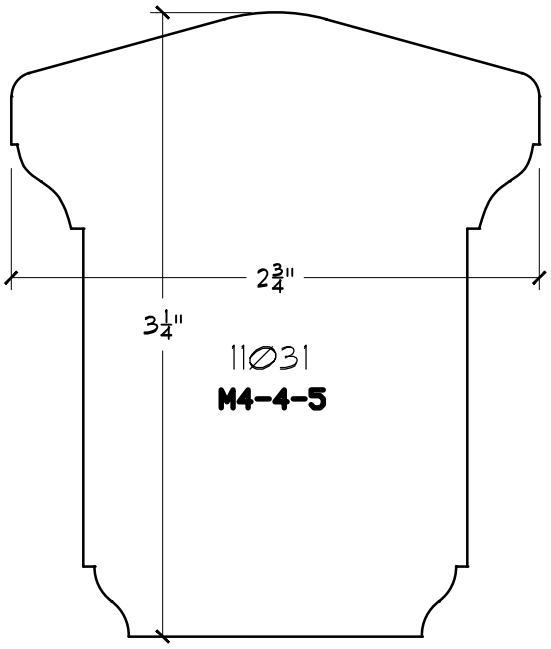
2 3/4"
3 1/4"
11031
M4-4-5

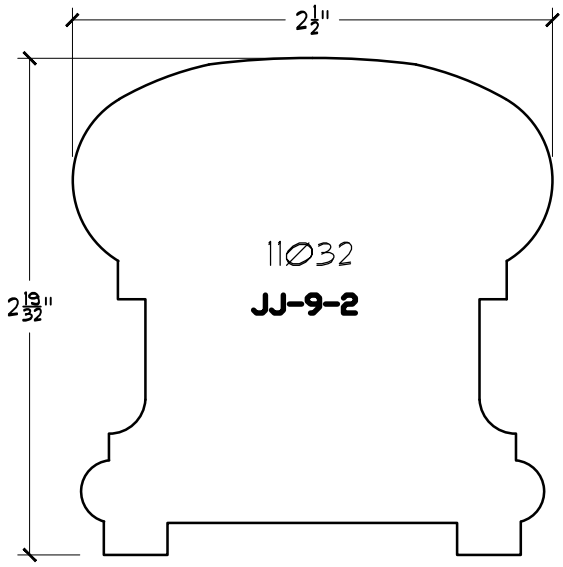
2 1/2"
2 19/32"
11032
JJ-9-2

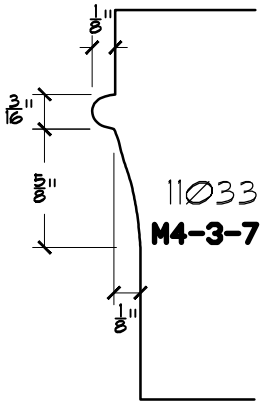
1/8"
3/16"
5/8"
1/8"
11033
M4-3-7

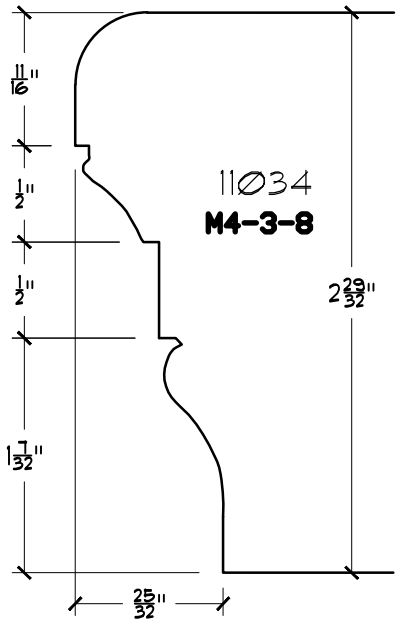
11/16"
1/2"
1/2"
1 7/32"
25/32"
2 29/32"
11034
M4-3-8

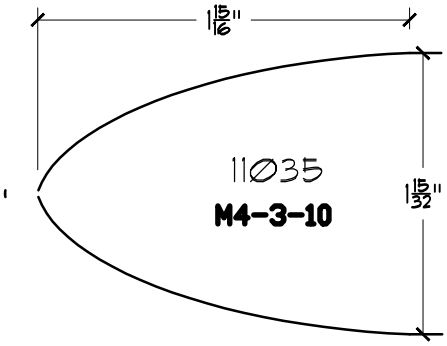
1 15/16"
1 15/32"
11035
M4-3-10

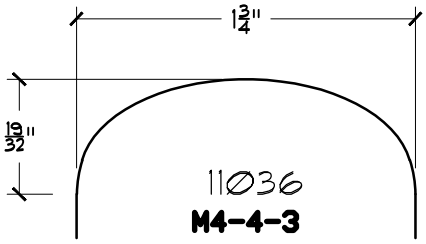
1 3/4"
19/32"
11036
M4-4-3

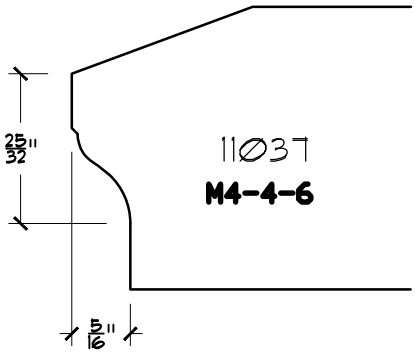
25/32"
5/16"
11037
M4-4-6

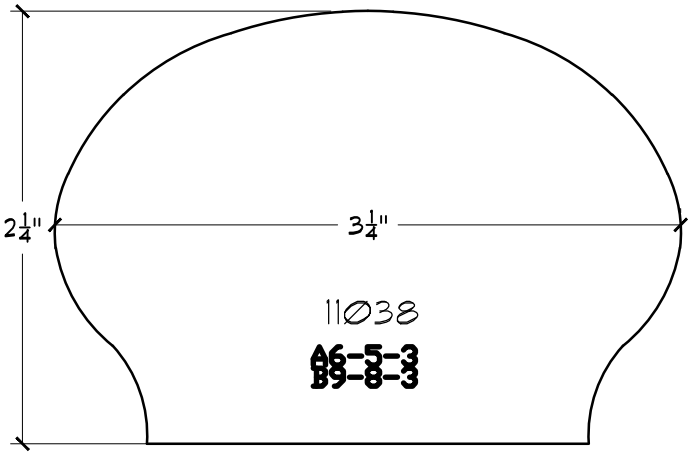
2 1/4"
3 1/4"
11038
A6-5-3
B9-8-3

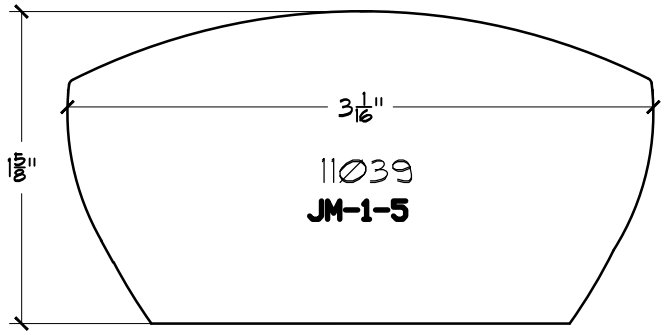
3 1/16"
1 5/8"
11039
JM-1-5

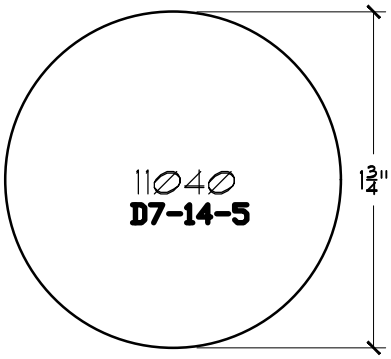
11040
D7-14-5
1 3/4"

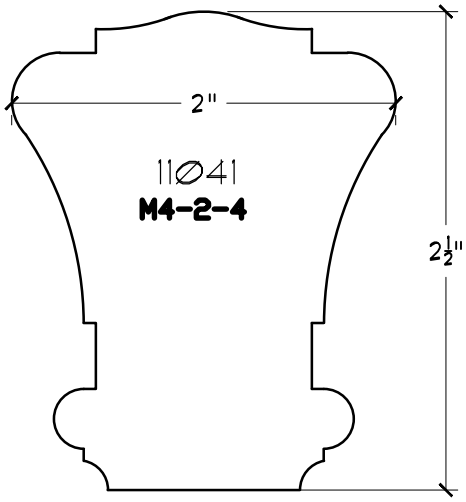
2"
11041
M4-2-4
2 1/2"

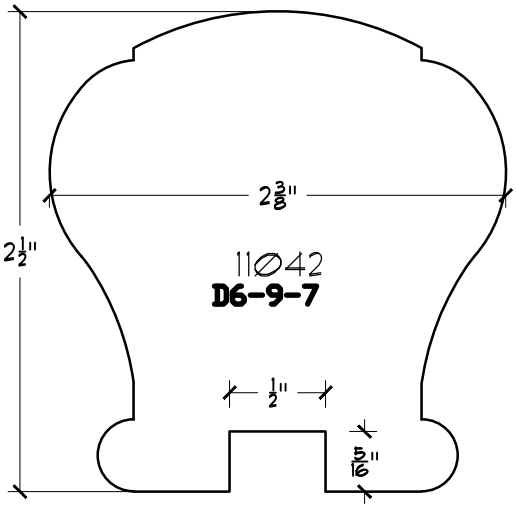
2 3/8"
2 1/2"
11042
D6-9-7
1/2"
5/16"

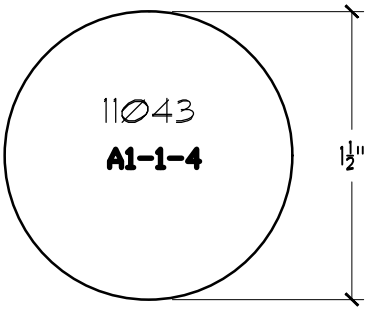
11043
A1-1-4
1 1/2"

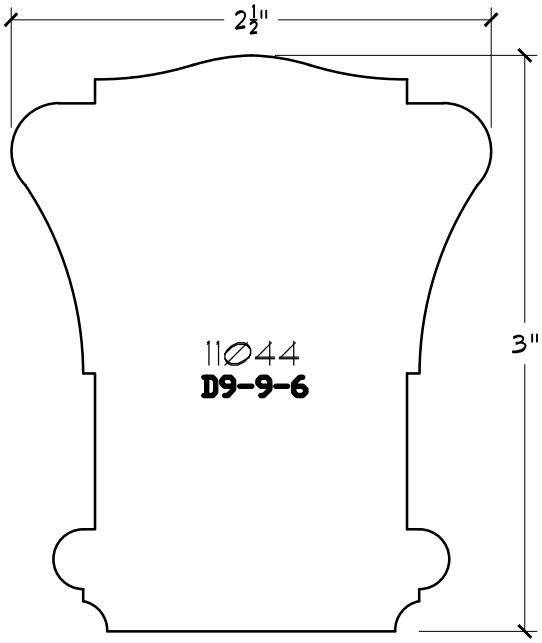
2 1/2"
11044
D9-9-6
3"

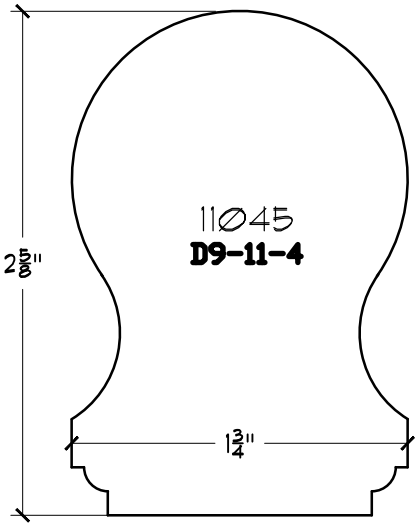
2 5/8"
11045
D9-11-4
1 3/4"

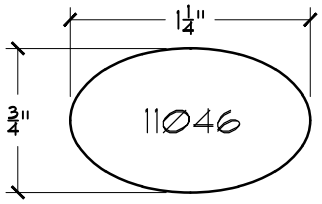

D6-5-1T
D6-5-1B

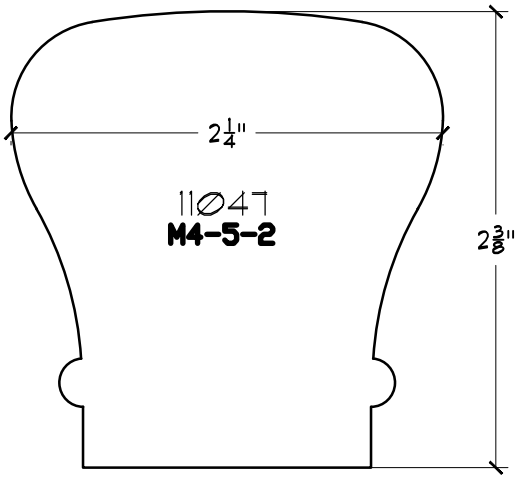

M4-5-2

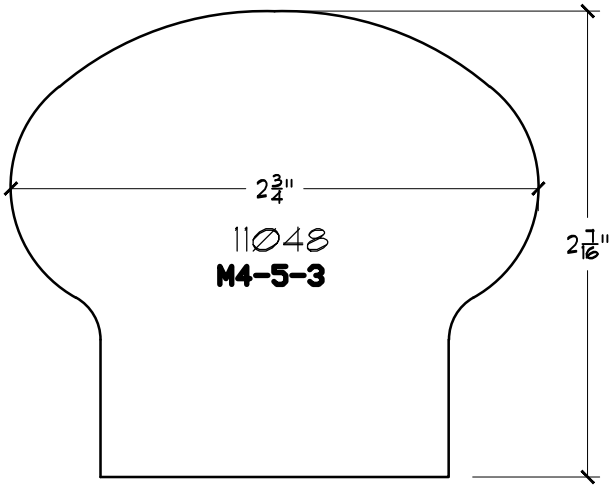

M4-5-3

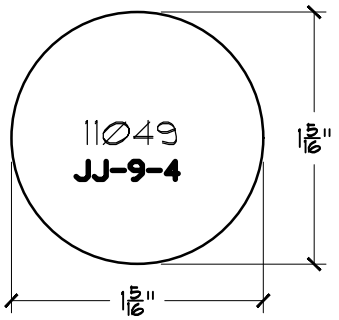

JJ-9-4

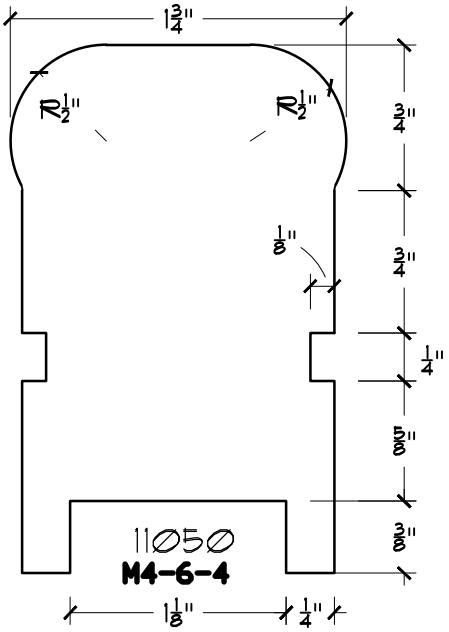

M4-6-4

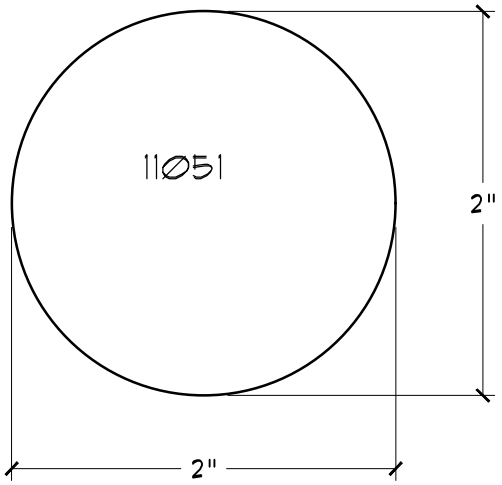

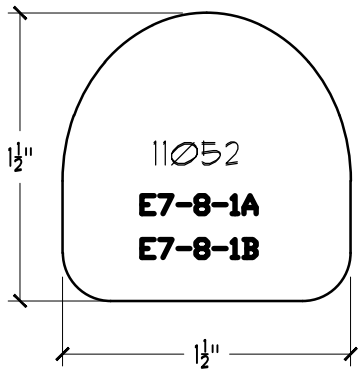
1½"
11052
E7-8-1A
E7-8-1B
1½"

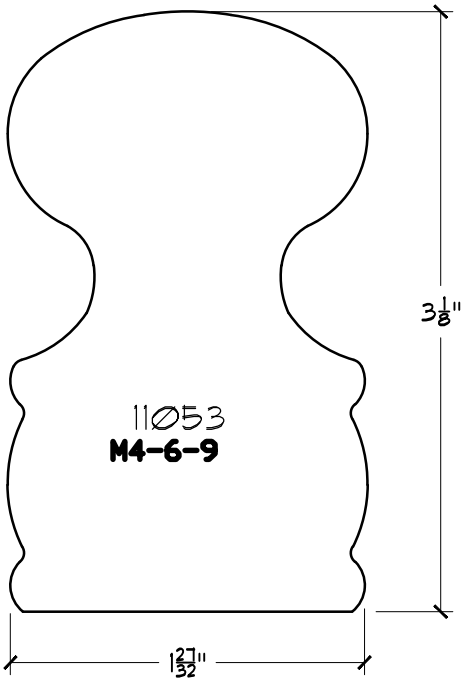
3⅛"
11053
M4-6-9
1 27/32"

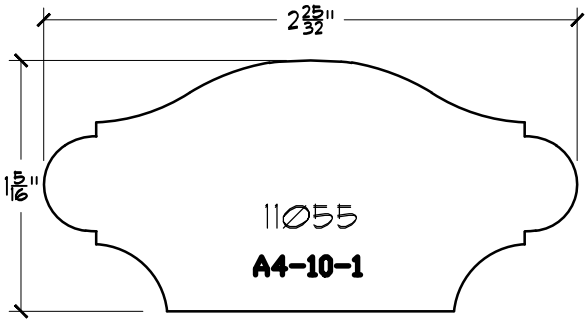
2 25/32"
1 5/16"
11055
A4-10-1

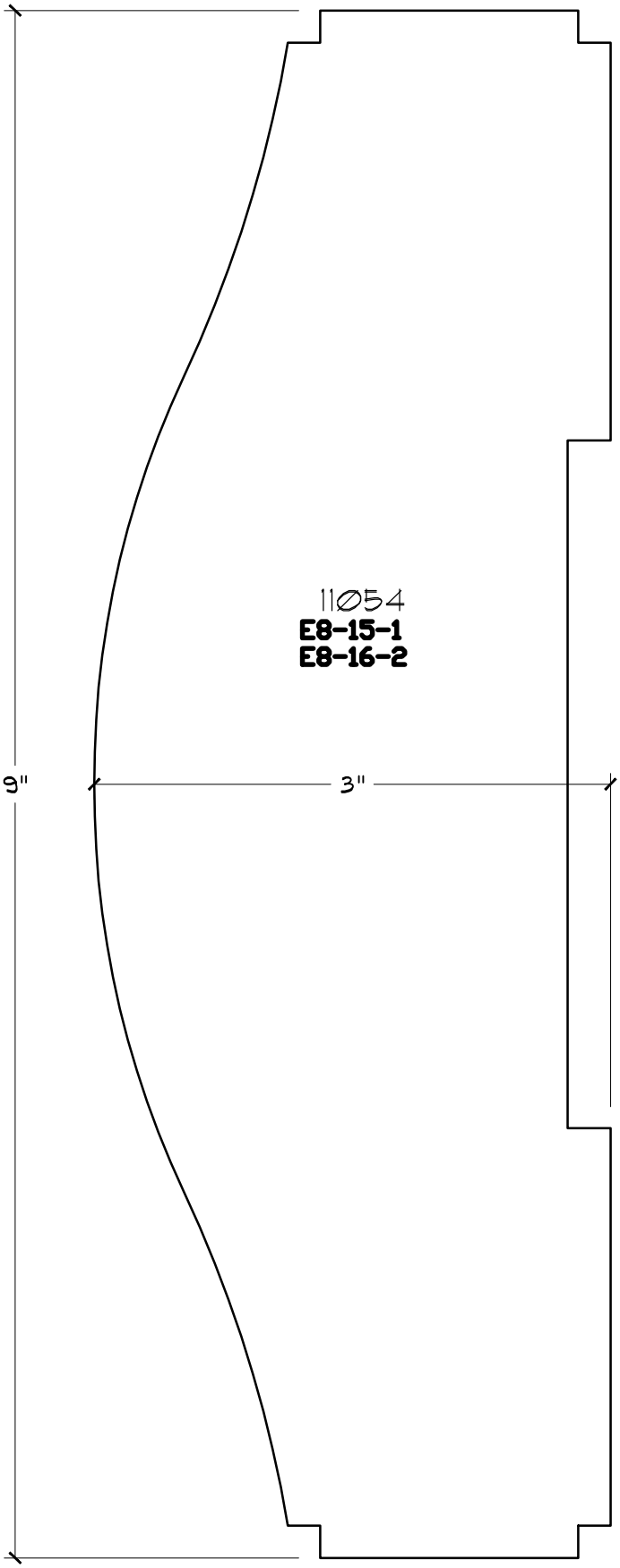
11054
E8-15-1
E8-16-2
9"
3"

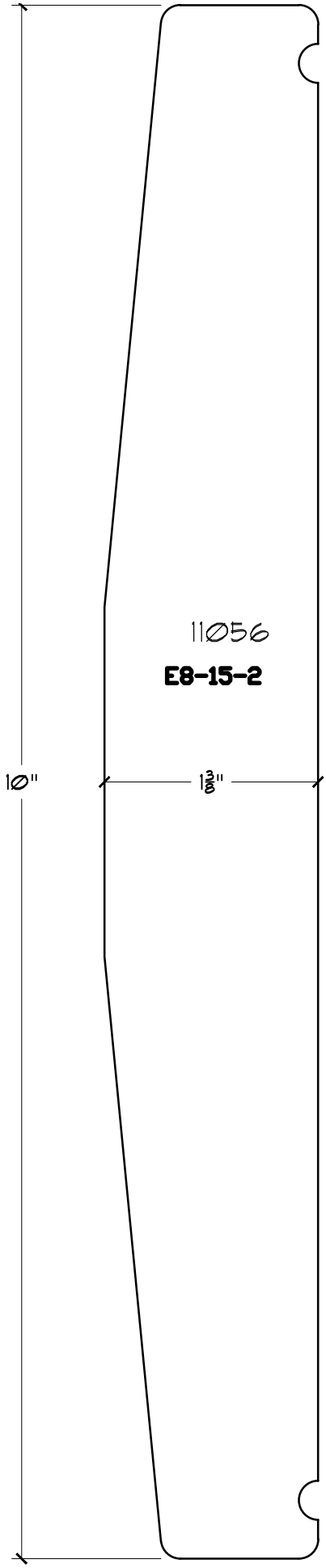
11056
E8-15-2
10"
1 3/8"

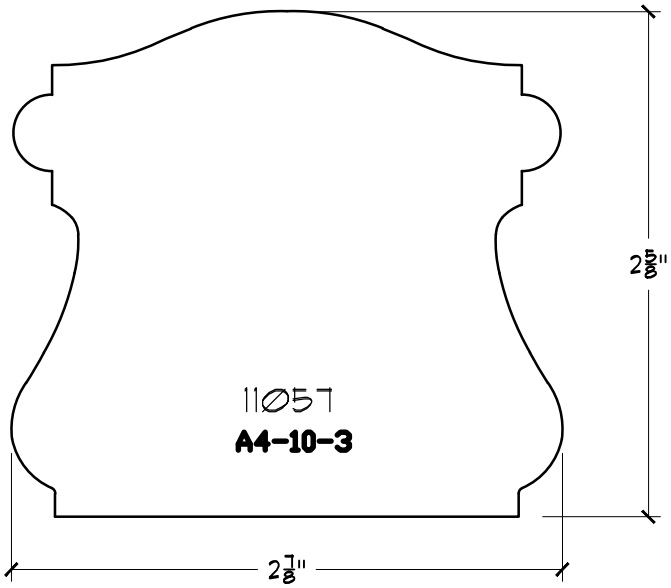
11057
A4-10-3
2 5/8"
2 7/8"

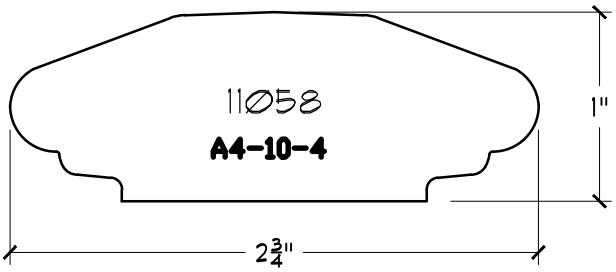
11058
A4-10-4
1"
2 3/4"

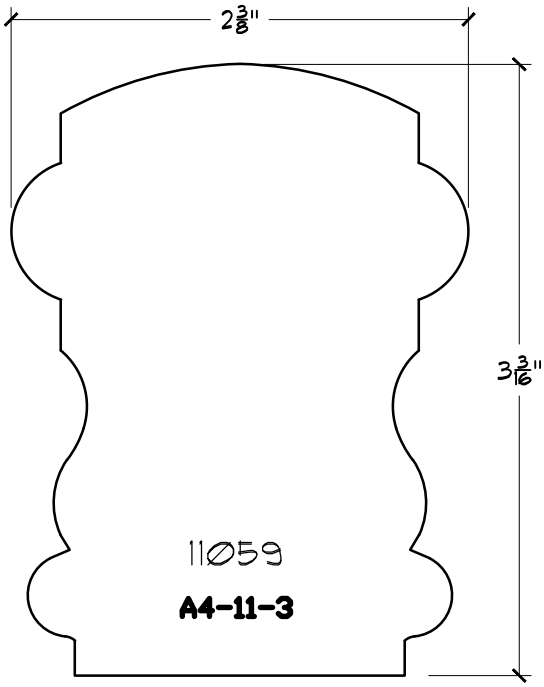
2 3/8"
3 3/16"
11059
A4-11-3

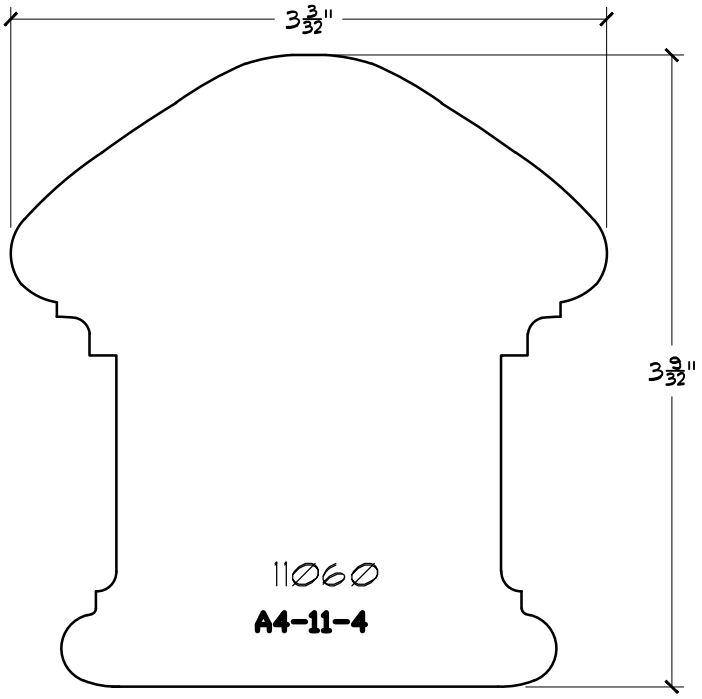
3 3/32"
3 9/32"
11060
A4-11-4

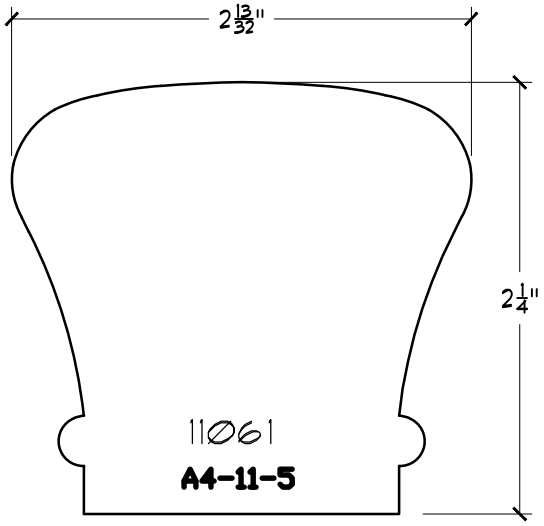
2 13/32"
2 1/4"
11061
A4-11-5

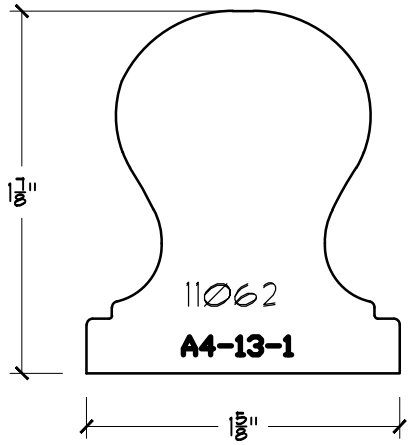
1 7/8"
11062
A4-13-1
1 5/8"

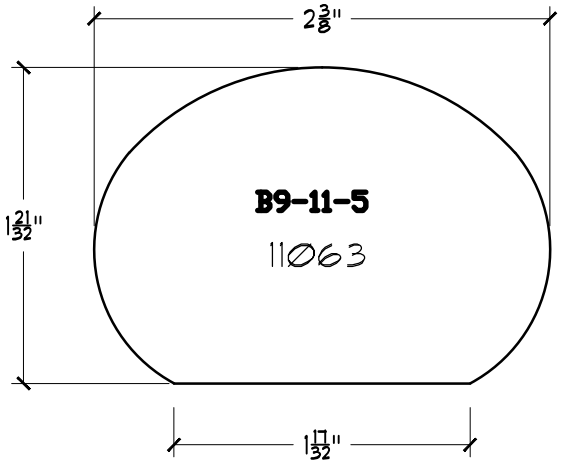
2 3/8"
1 21/32"
B9-11-5
11063
1 17/32"

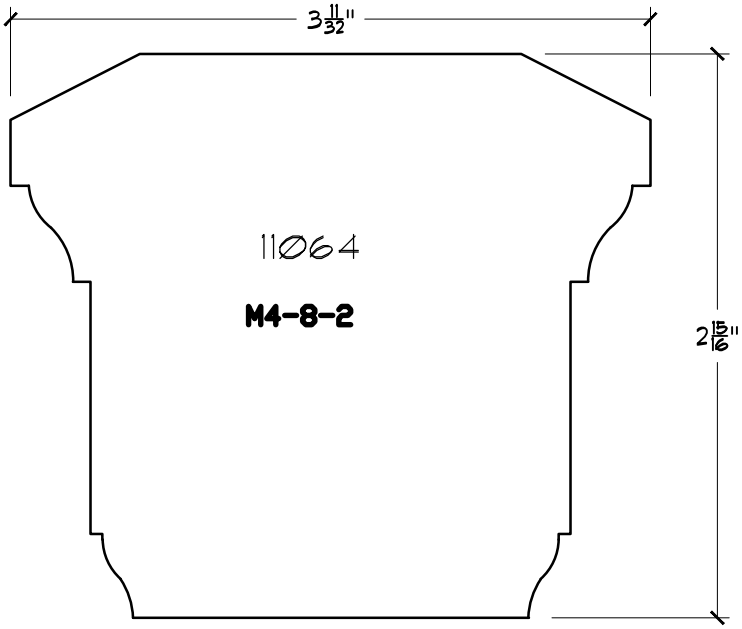
3 11/32"
11064
M4-8-2
2 15/16"

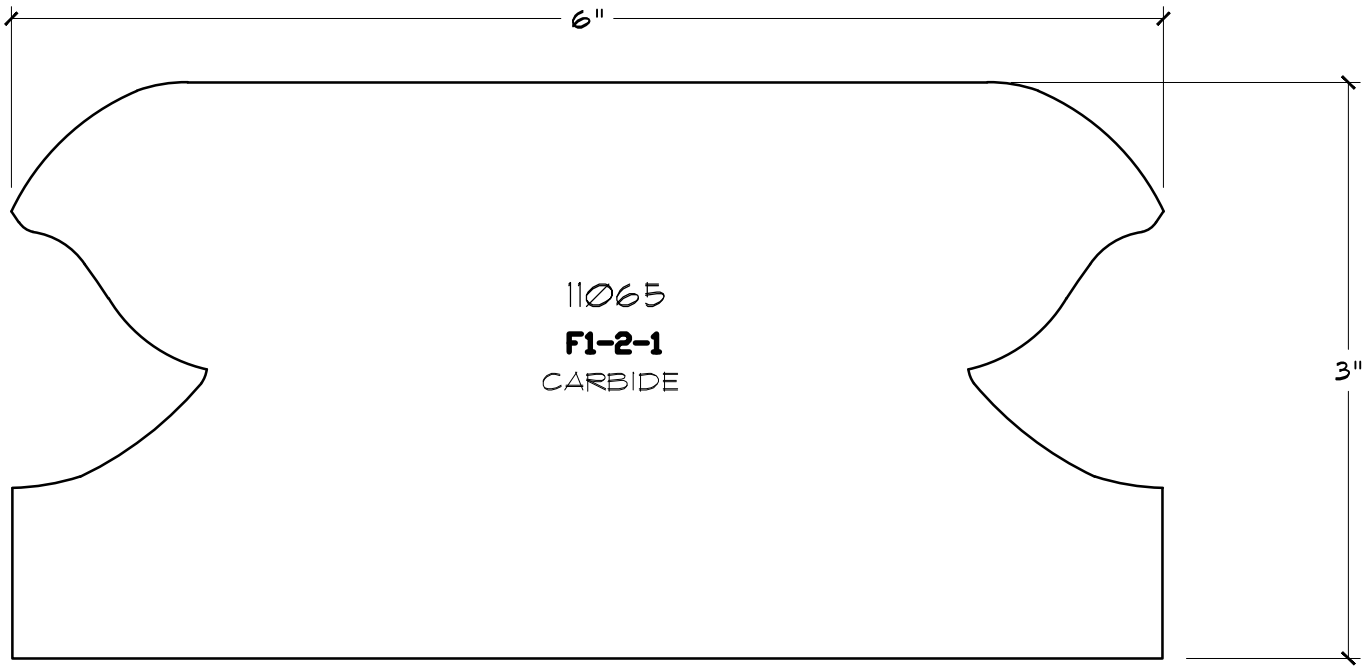
6"
3"
11065
F1-2-1
CARBIDE

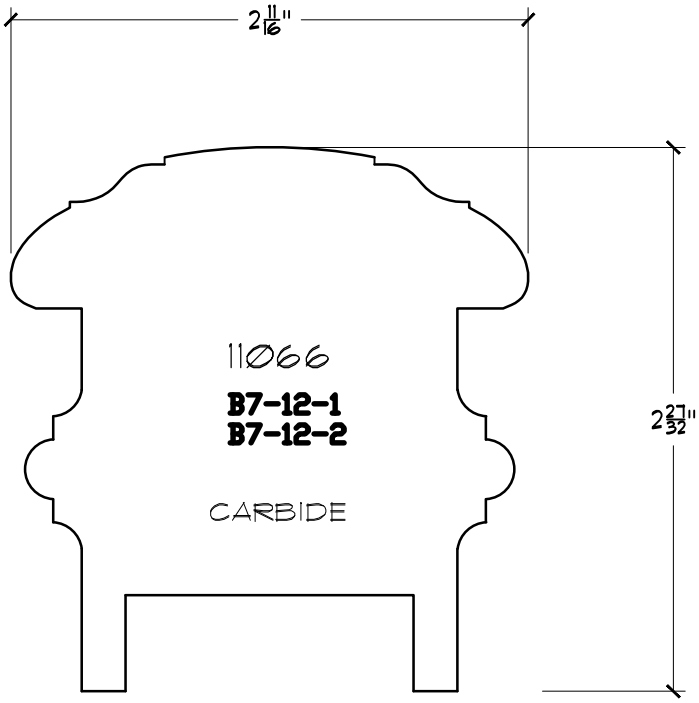
2 11/16"
2 27/32"
11066
B7-12-1
B7-12-2
CARBIDE

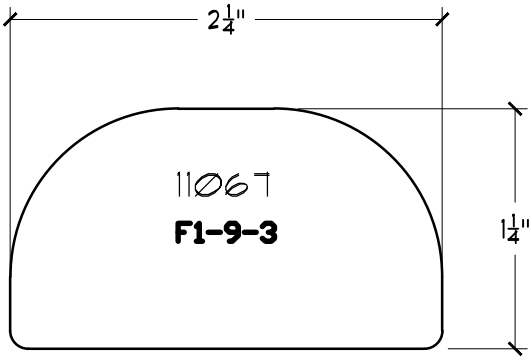
2 1/4"
1 1/4"
11067
F1-9-3

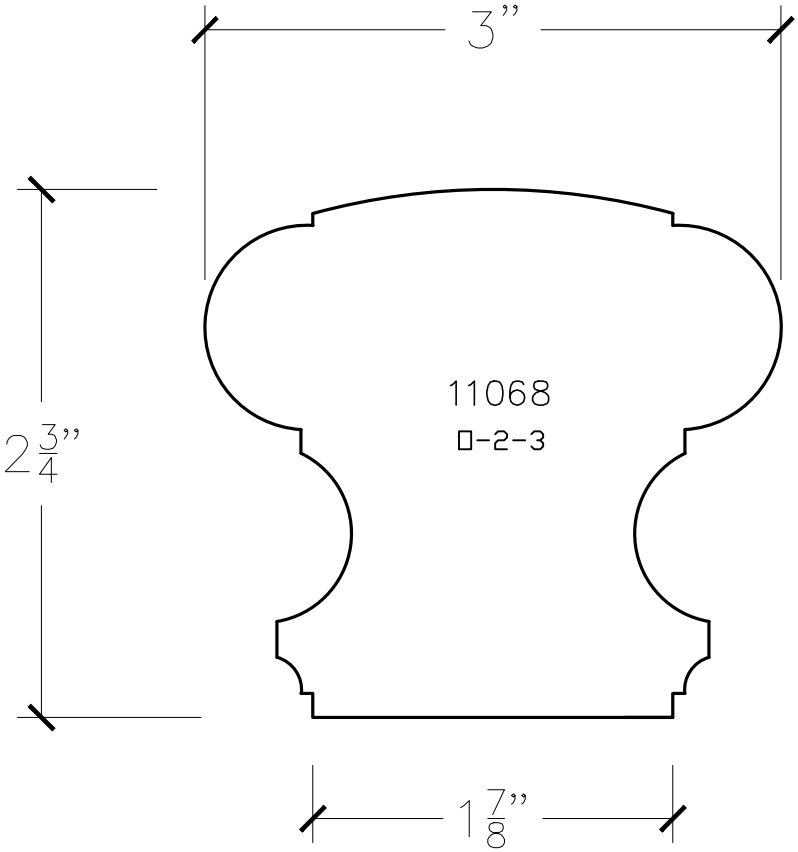
3"
2 3/4"
11068
□-2-3
1 7/8"

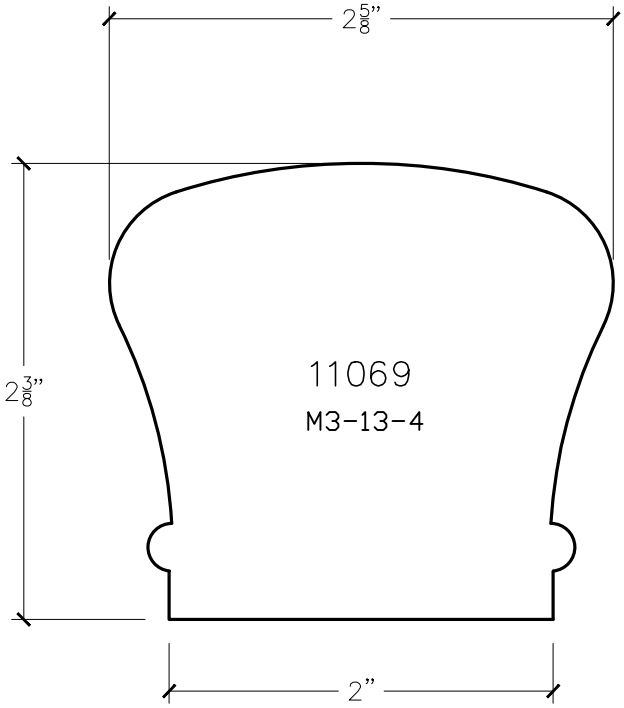
2 5/8"
2 3/8"
11069
M3-13-4
2"

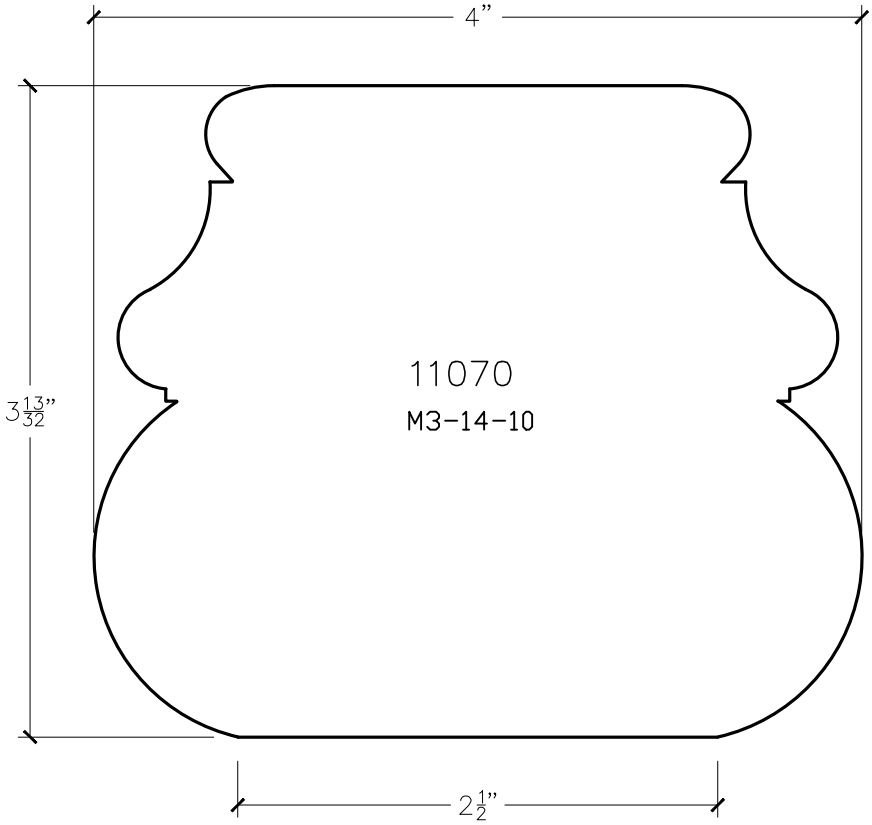
4"
3 13/32"
11070
M3-14-10
2 1/2"

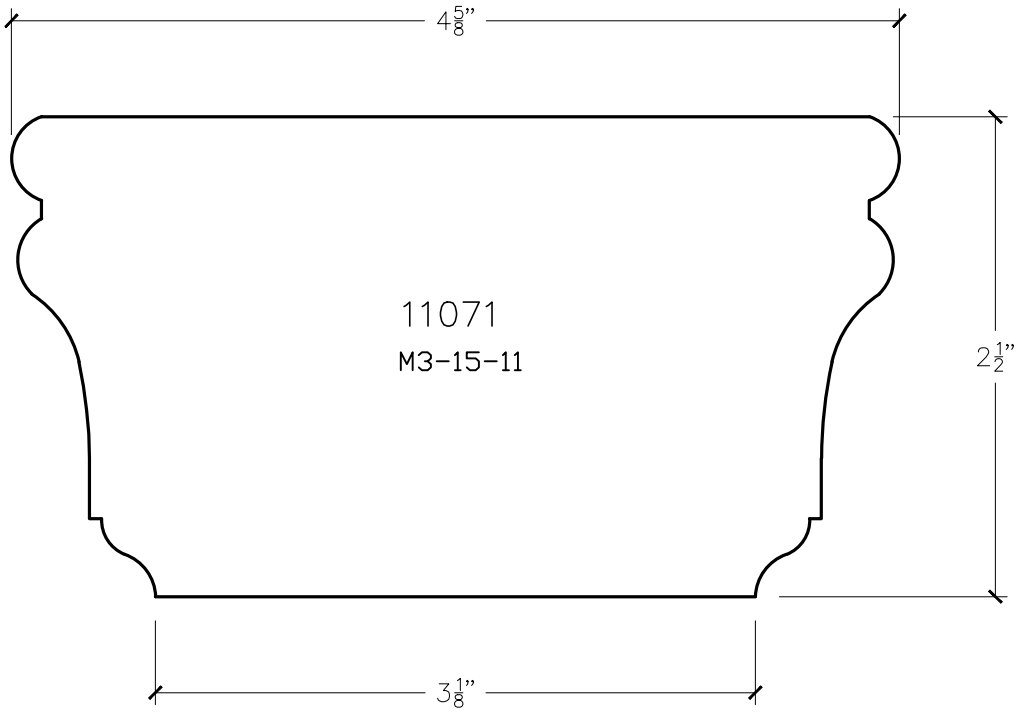
4 5/8"
11071
M3-15-11
2 1/2"
3 1/8"

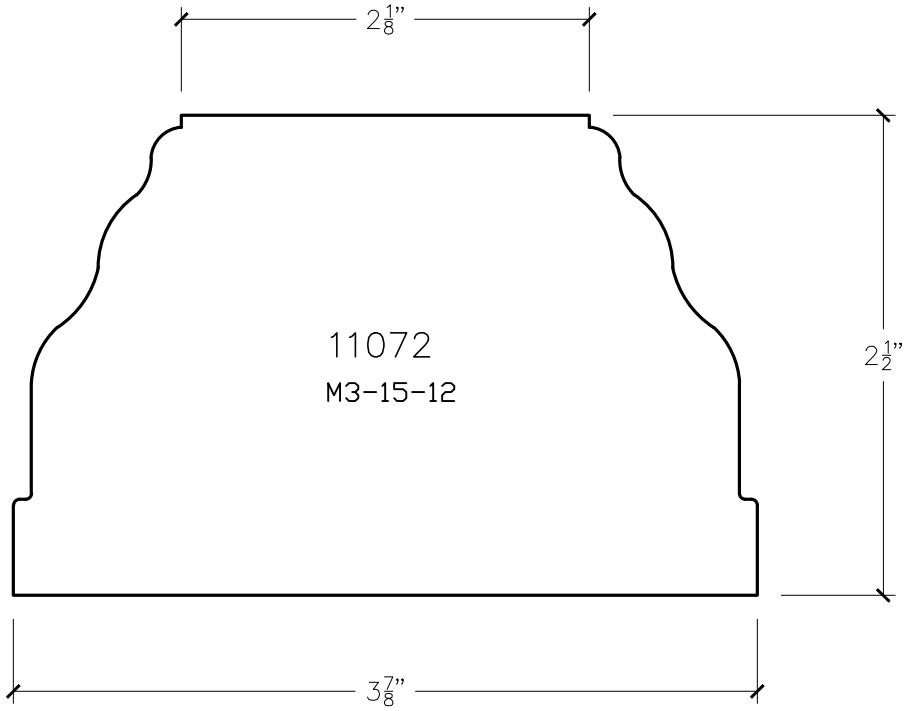
2 1/8"
11072
M3-15-12
2 1/2"
3 7/8"